技術データ
VACUTAP® VR®. 負荷時タップ切換器

Irm 700...3 200 A
5224510/09 JA

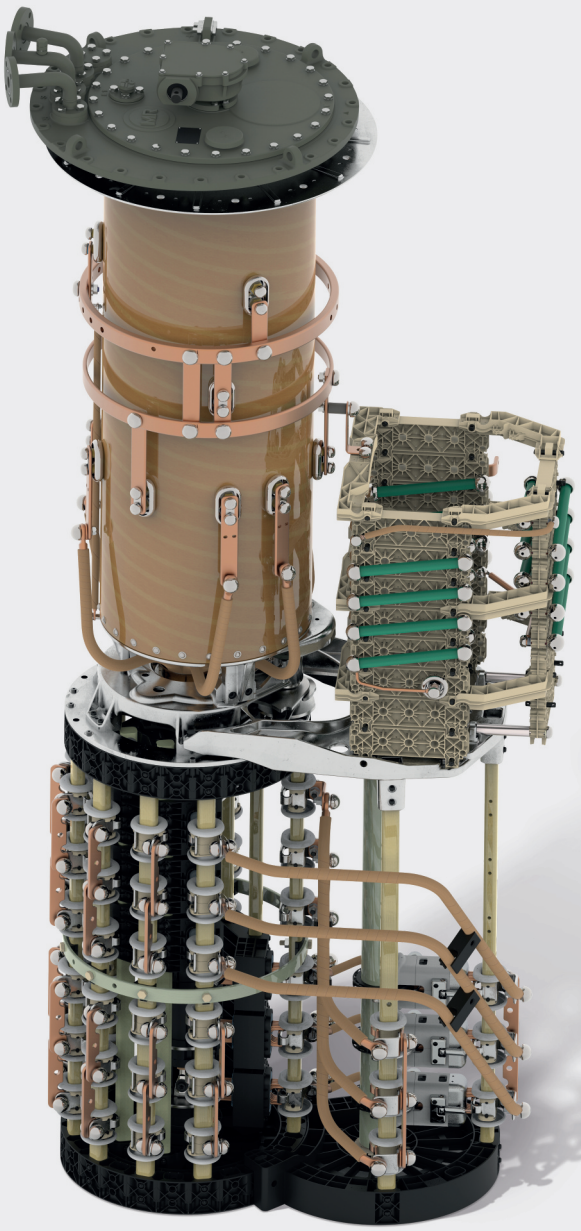

© All rights reserved by Maschinenfabrik Reinhausen
明示的に許可された場合を除き、本書を配布および複製すること、さらには本書内容を使用および公開することは禁じられています。
侵害行為があった場合は、賠償責任が生じます。特許、実用新案、意匠の付与に関するすべての権利を留保します。
本書の公開後に、製品に変更や修正が加えられている可能性があります。
製品のテクニカルデータや設計、納入内容を変更する権利は弊社が有します。
一般に、個別の見積および注文の処理時に提供された情報および合意された契約内容が法的拘束力を有します。
本書の原版はドイツ語で作成されています。

目次

1 はじめに 5
1.1 負荷時タップ切換器（OLTC）名称 5
1.1.1 OLTC形式名の例 5
1.1.2 タップ位置の数および基本接続 6
1.2 負荷時タップ切換器（OLTC）の形式 7
1.3 基本接続 7

2 技術データ 10
2.1 OLTCの特性 10
2.2 使用可能条件 13
2.3 ステップ容量線図 14
2.3.1 電力系統用途のステップ容量線図 14
2.3.2 電気アーク炉用途のステップ容量線図 17
2.4 許容電圧ストレス 18
2.4.1 絶縁距離（多段の転位切換の副切換器および選択器サイズRESを除く） 18
2.4.2 多段の転位切換の副切換器を使用した選択器サイズB、C、Dの絶縁距離 22
2.4.3 選択器サイズ RES の絶縁距離 24
2.5 実現可能な接続 27
2.6 タップ巻線の電位接続 30
2.6.1 R形選択器の回復電圧と遮断電流 30
2.6.2 M形選択器の回復電圧と遮断電流 32

3 特殊設計 33
3.1 デルタ接続用のOLTCの組み合わせ 33
3.2 多段の転位切換の副切換器を備えたOLTC 34
3.3 中性点が非接地のスター接続用のOLTC 34

4 図面 35
4.1 形式概要 35
4.1.1 10017427 36
4.1.2 10017449 37
4.1.3 10017453 38
4.1.4 10017591 39
4.1.5 10017622 40
4.1.6 10017626 41
4.1.7 10017697 42
4.1.8 10017698 43
4.1.9 10020883 44
4.1.10 10117070 45
4.1.11 10171577 46
4.1.12 10162479 47
4.1.13 10162476 48
4.2 寸法図 49
4.2.1 10017856 50
4.2.2 SED_5143008_00_001_2 52
4.2.3 10017862 54
4.2.4 10017863 56
4.2.5 10017867 58
4.2.6 SED_5144363_00_001_2 60
4.2.7 10017860 62
4.2.8 10017864 64
4.2.9 10017865 66
4.2.10 10017858 68
4.2.11 10017861 70
4.2.12 10017866 72
4.2.13 10116984 74
4.2.14 10116986 76
4.2.15 10020854 78
4.2.16 10020855 80
4.2.17 10020856 82
4.2.18 10020857 84
4.2.19 10171471 86
4.2.20 10171472 88
4.2.21 10171470 90
4.2.22 10162477 92
4.2.23 10162478 94
4.2.24 10162474 96
4.2.25 10162475 98
4.3 設置図 100
4.3.1 10017720 101
4.3.2 10171473 102
4.3.3 10017738 103
4.3.4 10162473 104
4.4 負荷時タップ切換器（OLTC)ヘッド 105
4.4.1 720026 106
4.4.2 895168 107
4.4.3 893899 108
4.4.4 10011023 109
4.4.5 720781 110
4.4.6 720027 111
4.4.7 893896 112
4.4.8 766161 113
4.5 選択器 114
4.5.1 10009917 115
4.5.2 10009030 116
4.5.3 10016570 119
4.5.4 10018046 122
4.5.5 10135742 123
4.5.6 10010019 124
4.5.7 10017264 125
4.5.8 723590 126
4.5.9 10117014 127
4.5.10 899941 128
4.6 電位接続ユニット 129
4.6.1 10018004 130
4.6.2 10018008 131
4.6.3 10018011 132
4.6.4 10018013 134
4.6.5 10166767 136
4.6.6 10166766 137
4.6.7 10166768 138
4.6.8 10166769 139
4.6.9 10017725 140
4.6.10 10017533 141

4.6.11 898804 142
4.6.12 898690 143
4.6.13 898691 144
4.6.14 898692 145
4.6.15 788266 146
4.6.16 719733 147
4.7 接続図（例） 148
4.7.1 5140296 149
4.7.2 5140298 150
4.7.3 5140300 151
4.7.4 5140417 152
4.7.5 5140418 153
4.7.6 5140419 154
4.7.7 5140630 155
4.7.8 5140631 156
4.7.9 5140632 157

1 はじめに

本資料には、製品に関する技術情報が記載されています。基本情報は、「技術データ（TD 61） - 一般セクション」に記載されています。

1.1 負荷時タップ切換器（OLTC）名称

OLTCには、相数、最大定格通過電流、装置の最高電圧U_m、選択器サイズなどさまざまな仕様があり、製品は基本接続図と共に提供されます。OLTCの形式名はこれらの仕様により決まり、したがって、明確で互換性のないものとなります。

1.1.1 OLTC形式名の例

負荷時タップ切換器（OLTC）VACUTAP® VRM III 1300 Y−72,5 / RC−10 19 1 WR.

形式名	VACUTAP® VRM III 1300 Y-72,5 / RC-10 19 1 WR	
VACUTAP® VRM	負荷時タップ切換器（OLTC）の種類	
III	相数	
1300	最後の桁：	最大定格通過電流I_{rm}(A)および具備している単相OLTCのセクタ数 中性点と共にOLTCを使用する場合、最後の桁の0は3つのセクタが具備していることを意味します。
	最後から2番目の桁：	0 = 分流なし 2 = 2つの分岐した巻線による強制分流が必要です。
Y	中性点で使用	
72.5	装置の最高電圧U_m（kV）	
RC	選択器サイズ	
10 19 1 WR	基本接続	

表 1: OLTC名称の例

1.1.2 タップ位置の数および基本接続

選択器は、必要な位置の数およびタップ巻線接続にかなりの程度まで適合させることができます。基本接続は、選択器の分割、運転位置の数、中間位置の数、副切換器の種類、および電位接続の種類の点で異なります。

例：10 19 1 WR

基本接続の指定	10 19 1 WR
10	選択器の接点数
19	タップ位置の最大数
1	中間位置の数
W	副切換器モデル： W = 極性反転の副切換器 G = 粗タップ接続
R	電位接続のタイプ： R = 電位固定用抵抗器あり S = 電位固定用スイッチと電位固定用抵抗器を搭載 P = 電位固定用抵抗器がある電位固定用スイッチ

表 2: 基本接続の例

1.2 負荷時タップ切換器（OLTC）の形式

OLTCモデルの概要は、「形式概要」 [▶セクション 4.1, ページ 35]セクションに記載されています。

1.3 基本接続

以下に、OLTCの基本接続の例を、MR標準に準拠した選択器の接続接点の名称とともにいくつか示します。「許容電圧ストレス」 [▶セクション 2.4, ページ 18]のセクションで実際に行うことができる接続を確認することができます。

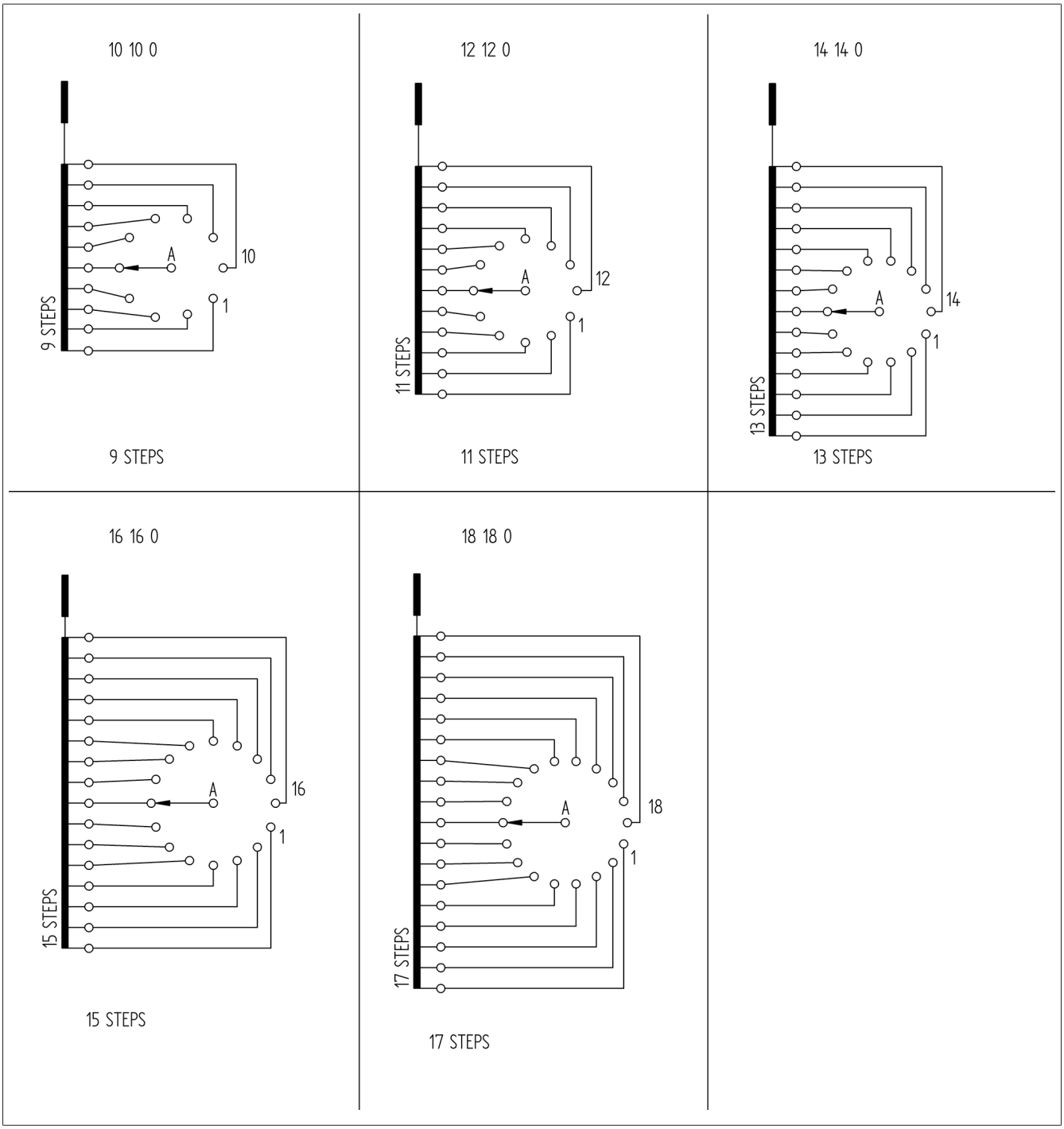

図 1: 副切換器なしの基本接続

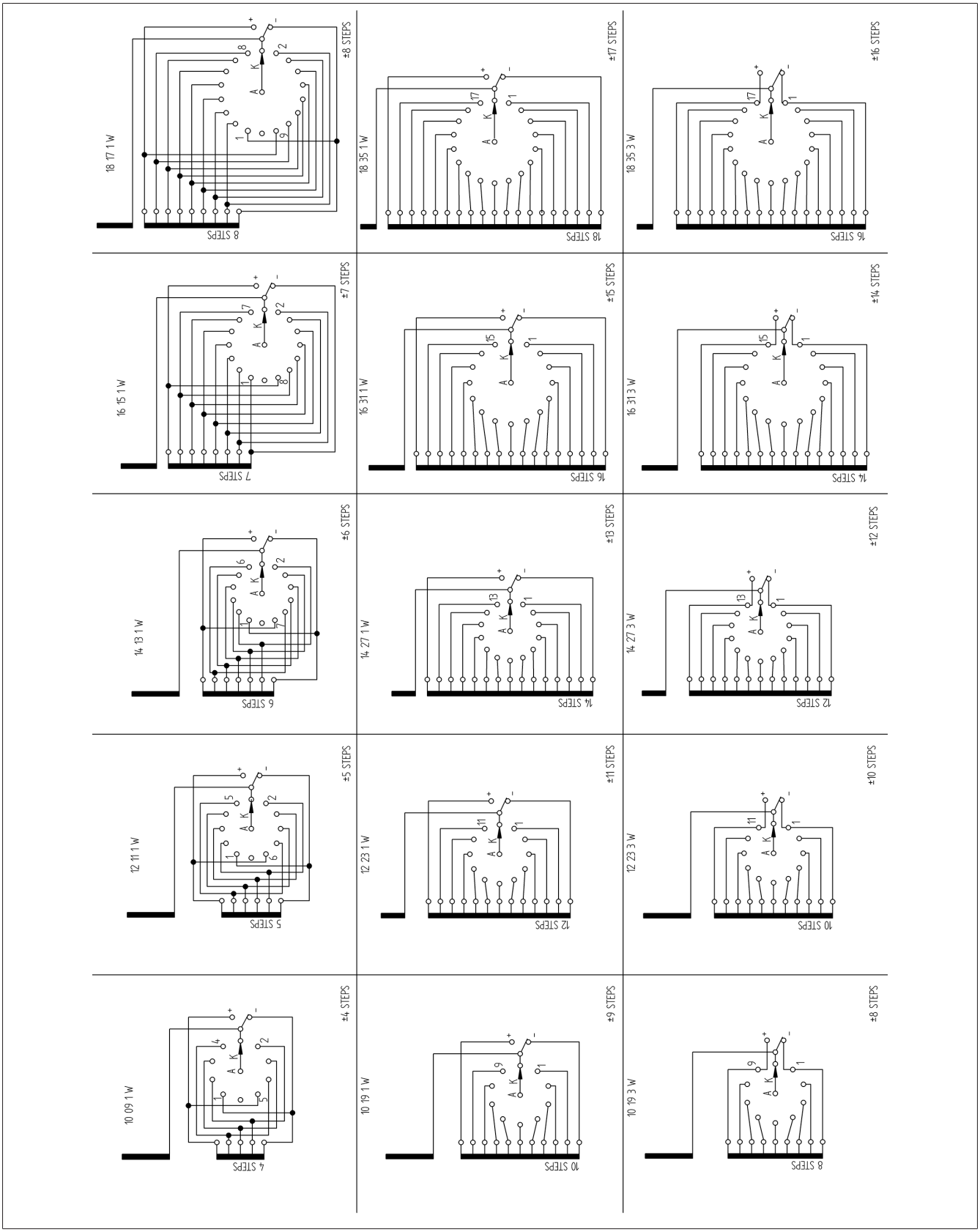

図 2: 極性切換器の基本接続

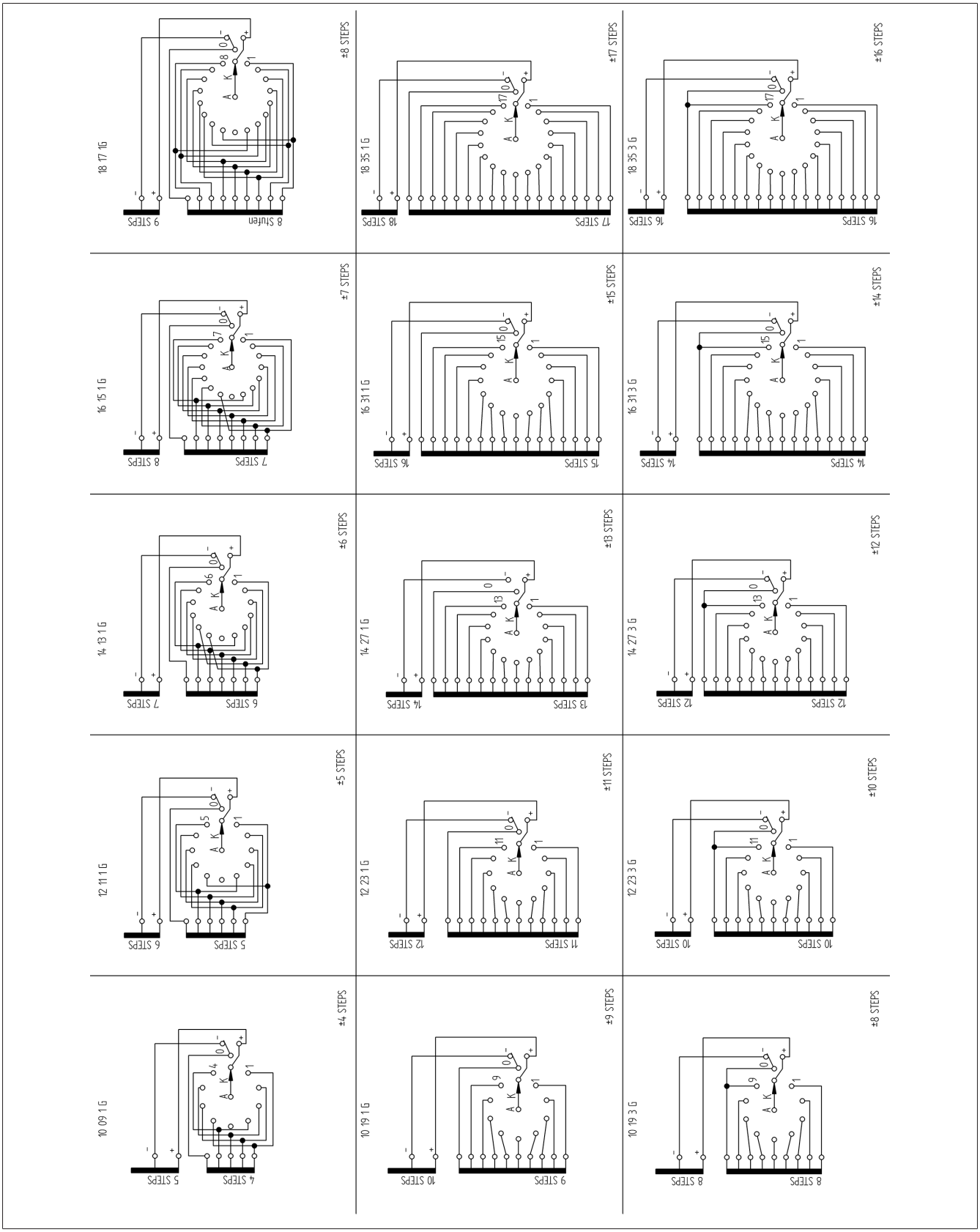

図 3: 転位切換器の基本接続

2 技術データ

2.1 OLTCの特性

VACUTAP® VR®、I_{rm} 700…1 300 A、M選択器の電気的なデータ

負荷時タップ切換器	VRS I 701 VRS II 702 VRS III 700 Y	VRS I 1001	VRS I 1301
最大定格通過電流 I_{rm} [A]	700	1 000	1 300
定格短時間電流 [kA]	10	12	16
定格短絡期間 [s]	3	3	3
定格ピーク耐電流 [kA]	25	30	40
最大定格ステップ電圧 U_{irm} [V]	4 500	4 500	4 500
ステップ容量 P_{stm} [kVA][1)]	2 100 1 500	2 100 1 500	2 100 1 500
定格周波数 [Hz]	50…60		
[1)]ステップ容量線図 [▶セクション 2.3, ページ 14]参照			

表 3: VACUTAP® VRSの電気的なデータ

負荷時タップ切換器	VRM I 701 VRM II 702 VRM III 700 Y	VRM I 1001	VRM I 1301
最大定格通過電流 I_{rm} [A]	700	1 000	1 300
定格短時間電流 [kA]	10	12	16
定格短絡期間 [s]	3	3	3
定格ピーク耐電流 [kA]	25	30	40
最大定格ステップ電圧 U_{irm} [V]	4 500	4 500	4 500
ステップ容量 P_{stm} [kVA][1)]	3 000	3 000	3 000
定格周波数 [Hz]	50…60		
[1)]ステップ容量線図 [▶セクション 2.3, ページ 14]参照			

表 4: VACUTAP® VRMの電気的なデータ

VACUTAP® VR®、I_{rm} 700…1 600 A、R選択器の電気的なデータ

負荷時タップ切換器	VRS I 701 VRS II 702 VRS III 700 Y	VRS I 1001 VRS II 1002 VRS III 1000 Y	VRS I 1301 VRS II 1302 VRS III 1300 Y	VRS I 2622[1)]
最大定格通過電流 I_{rm} [A]	700	1 000	1 300	2 600
定格短時間電流 [kA]	10	12	16	26
定格短絡時間 [s]	3	3	3	3
定格ピーク耐電流 [kA]	25	30	40	65
最大定格ステップ電圧 U_{irm} [V]	4 500	4 500	4 500	4 500

負荷時タップ切換器	VRS I 701 VRS II 702 VRS III 700 Y	VRS I 1001 VRS II 1002 VRS III 1000 Y	VRS I 1301 VRS II 1302 VRS III 1300 Y	VRS I 2622[1)]
ステップ容量 P_{stm} [kVA][2)]	2 100 1 500	2 100 1 500	2 100 1 500	4 200 3 000
定格周波数 [Hz]	50…60			
[1)]2つの並列の分岐した巻線による強制分流が必要です。電気アーク炉操作用ではありません。 [2)]ステップ容量線図 [▶セクション 2.3, ページ 14]参照				

表 5: VACUTAP® VRSの電気的なデータ

負荷時タップ切換器	VRM I 701 VRM II 702 VRM III 700 Y	VRM I 1001 VRM II 1002 VRM III 1000 Y	VRM I 1301 VRM II 1302 VRM III 1300 Y	VRM I 2622[1)]
最大定格通過電流 I_{rm} [A]	700	1 000	1 300	2 600
定格短時間電流 [kA]	10	12	16	26
定格短絡時間 [s]	3	3	3	3
定格ピーク耐電流 [kA]	25	30	40	65
最大定格ステップ電圧 U_{irm} [V]	4 500	4 500	4 500	4 500
ステップ容量 P_{stm} [kVA][2)]	3 000	3 000	3 000	6 000
定格周波数 [Hz]	50…60			
[1)]2つの並列の分岐した巻線による強制分流が必要です。電気アーク炉操作用ではありません。 [2)]ステップ容量線図 [▶セクション 2.3, ページ 14]参照				

表 6: VACUTAP® VRMの電気的なデータ

負荷時タップ切換器	VRL I 1301 VRL II 1302 VRL III 1300 Y	VRL I 1601 VRL III 1600 Y	VRL I 2622[1)]
最大定格通過電流 I_{rm} [A]	1 300	1 600	2 600
定格短時間電流 [kA]	16	16	26
定格短絡時間 [s]	3	3	3
定格ピーク耐電流 [kA]	40	40	65
最大定格ステップ電圧 U_{irm} [V]	4 500	4 600	4 500
ステップ容量 P_{stm} [kVA][2)]	5 850	6 000	11 700
定格周波数 [Hz]	50…60		
[1)]2つの並列の分岐した巻線による強制分流が必要です。電気アーク炉操作用ではありません。 [2)]ステップ容量線図 [▶セクション 2.3, ページ 14]参照			

表 7: VACUTAP® VRLの電気的なデータ

VACUTAP®VRHおよびVRX負荷時タップ切換器は特殊なモデルであり、ご要望に応じてのみ利用できます。

負荷時タップ切換器	VRH I 651 VRH II 652 VRH III 650 Y	VRH I 1301 VRH II 1302 VRH III 1300 Y	VRH I 2622[1)]	VRX I 652	VRX I 1302
最大定格通過電流 I_{rm} [A]	650	1 300	2 600	650	1300
定格短時間電流 [kA]	10	16	26	10	16
定格短絡時間 [s]	3	3	3	3	3
定格ピーク耐電流 [kA]	25	40	65	25	40
最大定格ステップ電圧 U_{irm} [V]	6 000	6 000	6 000	12 000[2)]	12 000[2)]
ステップ容量 P_{stm} [kVA][3)]	3 000	6 000	12 000	6 000	12 000
定格周波数 [Hz]	50…60				

[1)]2つの並列の分岐した巻線による強制分流が必要です。電気アーク炉操作用ではありません。
[2)] 巻線数の倍増が必要 [▶セクション 2.4, ページ 18]
[3)]ステップ容量線図 [▶セクション 2.3, ページ 14]参照

表 8: VACUTAP® VRH/VRXの電気的なデータ

VACUTAP® VR®、I_{rm} 1 800…3 200 A、R選択器の電気的なデータ

負荷時タップ切換器	VRL I 1801	VRL I 2001	VRL I 2401	VRL I 2601	VRL I 3001	VRL I 3201
最大定格通過電流 I_{rm} [A]	1 800	2 000	2 400	2 600	3 000	3 200
定格短時間電流 [kA]	20	24	24	26	30	32
定格短絡期間 [s]	3	3	3	3	3	3
定格ピーク耐電流 [kA]	50	60	60	65	75	80
最大定格ステップ電圧 U_{irm} [V]	6 000	6 000	6 000	6 000	6 000	6 000
ステップ容量 P_{stm} [kVA][1)]	10 000	10 000	10 000	10 000	10 000	10 000
定格周波数 [Hz]	50…60					

[1)]ステップ容量線図 [▶セクション 2.3, ページ 14]参照

表 9: VACUTAP® VRLの電気的なデータ

VACUTAP® VR®の機械データ

運転位置の数	副切換器なし：最大18 副切換器あり：最大35 複数の粗副切換器あり：最大107
セクター数	1…3
選択器サイズ	R形選択器：RC、RD、RDE、RE、RF、RES、E M選択器：B、C、D、DE
寸法	寸法図 [▶セクション 4.2, ページ 49]参照
重量	
油量および排斥油量	

表 10: VACUTAP® VR®の機械データ

2.2 使用可能条件

運転中の気温	-25°C～+50°C
動作中絶縁油の温度	-25°C～+105°C（変圧器が緊急運転中の場合は最大+115°C）
輸送温度、保管温度	-40°C～+50°C
乾燥温度	取付及び試運転説明書の「取り付け」章参照
圧縮強度	技術データTD 61 – 一般章参照
絶縁油	– IEC 60296およびASTM D3487(要望に応じて同等の規格)に準拠した石油製品由来の未使用絶縁油[1)] – IEC 60296に準拠した石油製品由来の未使用絶縁油、またはこれらの油と、IEC 60296、ASTM D3487、または要望に応じて同等の規格に準拠した石油製品[1)]とのブレンド – 天然および合成エステル、または要望に応じてシリコーン油などの代替絶縁油。 [1)]ガス ツー リキッド オイル（GTL油）は、ここでは石油製品として理解されています
オイルコンサベータの設置高さ	技術データTD 61 – 一般章参照
海抜設置高さ	技術データTD 61 – 一般章参照

表 11: 許容される使用環境条件

2.3 ステップ容量線図

2.3.1 電力系統用途のステップ容量線図

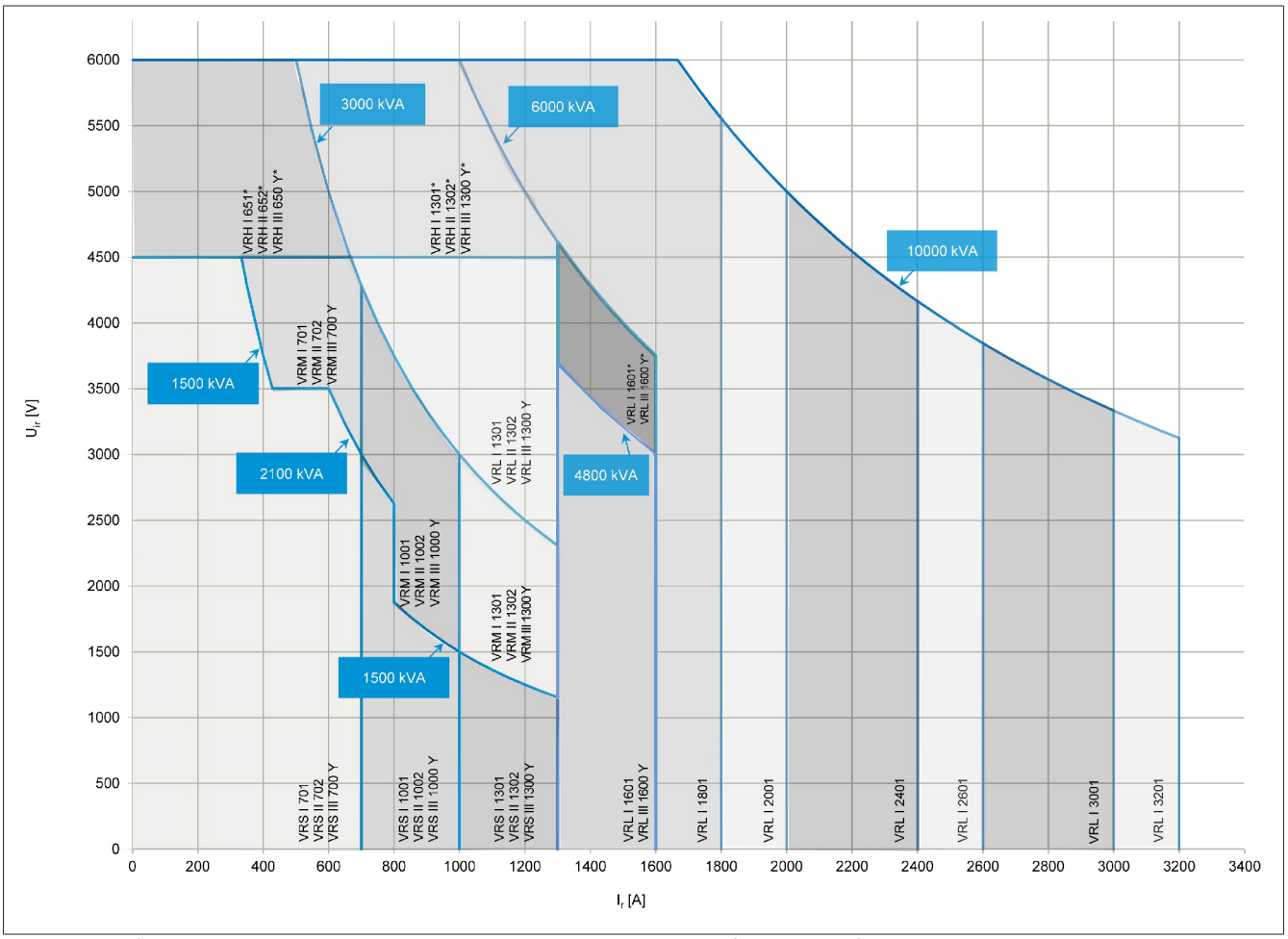

図 4: ステップ容量（定格電圧 U_{ir}、定格通過電流 I_r）、*印付きの負荷時タップ切換器タイプはご要望により生産いたします。

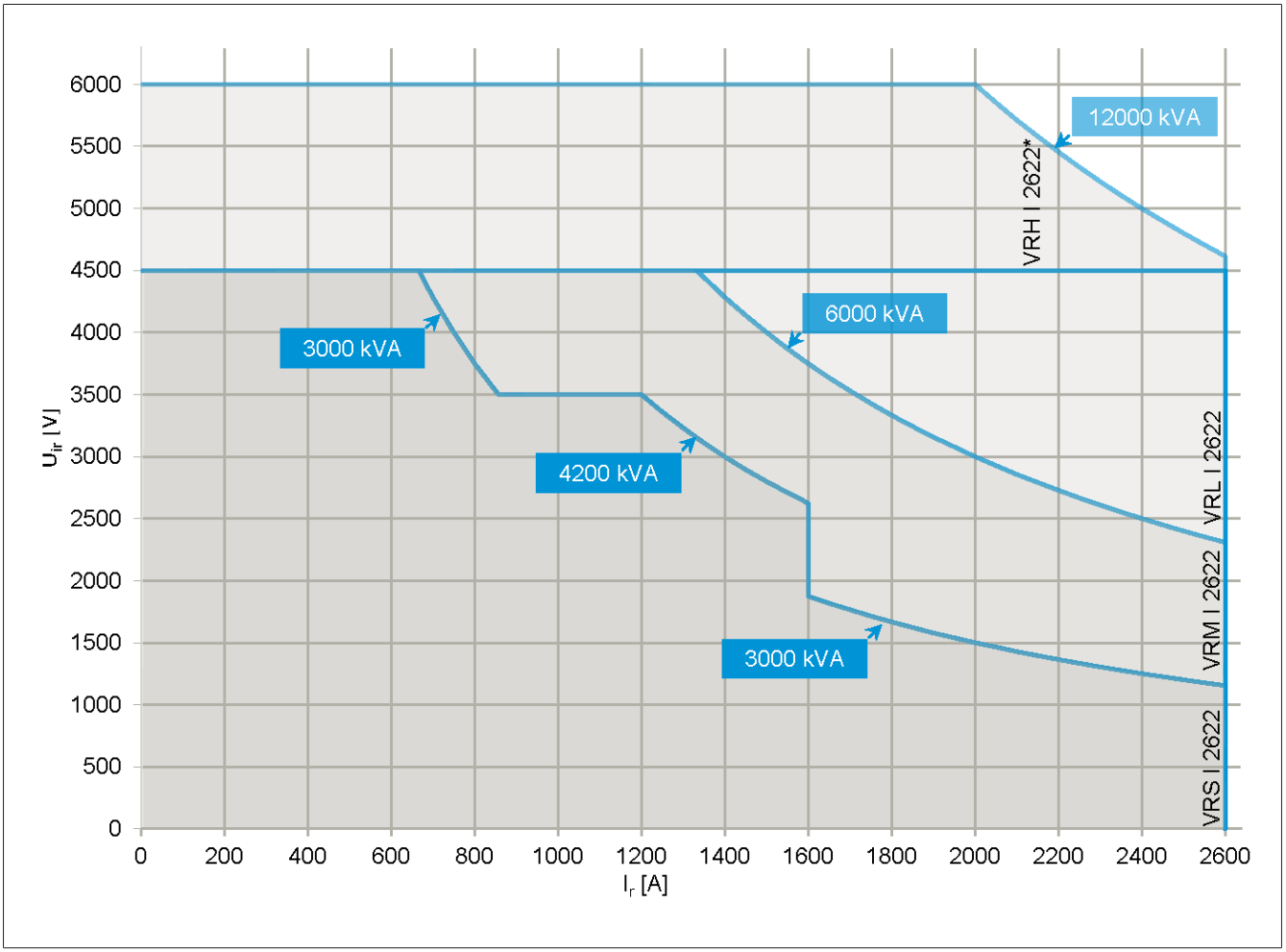

図 5: ステップ容量（定格電圧 U_{ir}、定格通過電流 I_r）、*印付きの負荷時タップ切換器タイプはご要望により生産いたします。

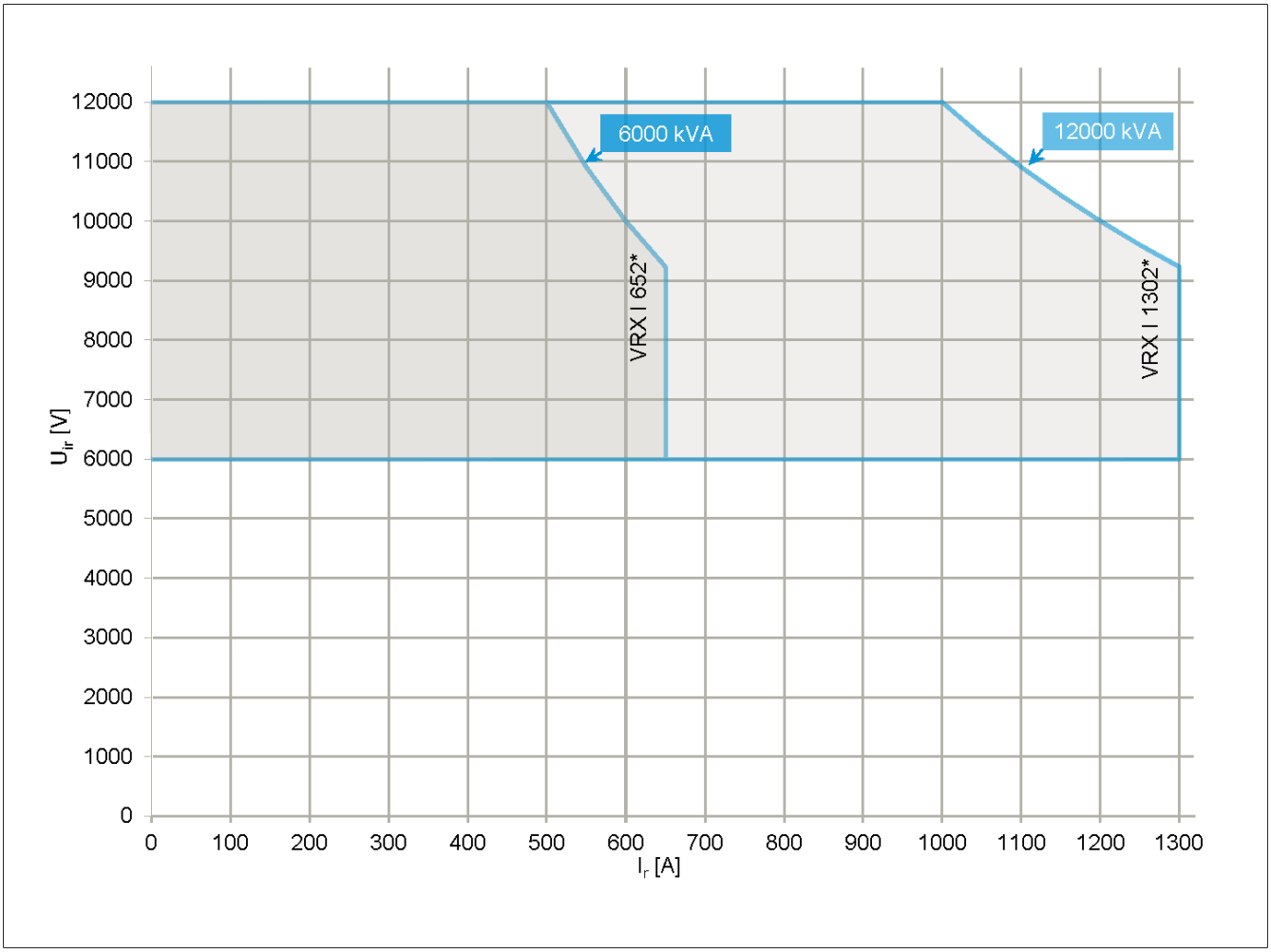

図 6: ステップ容量（定格電圧 U_{ir}、定格通過電流 I_r）、*印付きの負荷時タップ切換器タイプはご要望により生産いたします。

2.3.2 電気アーク炉用途のステップ容量線図

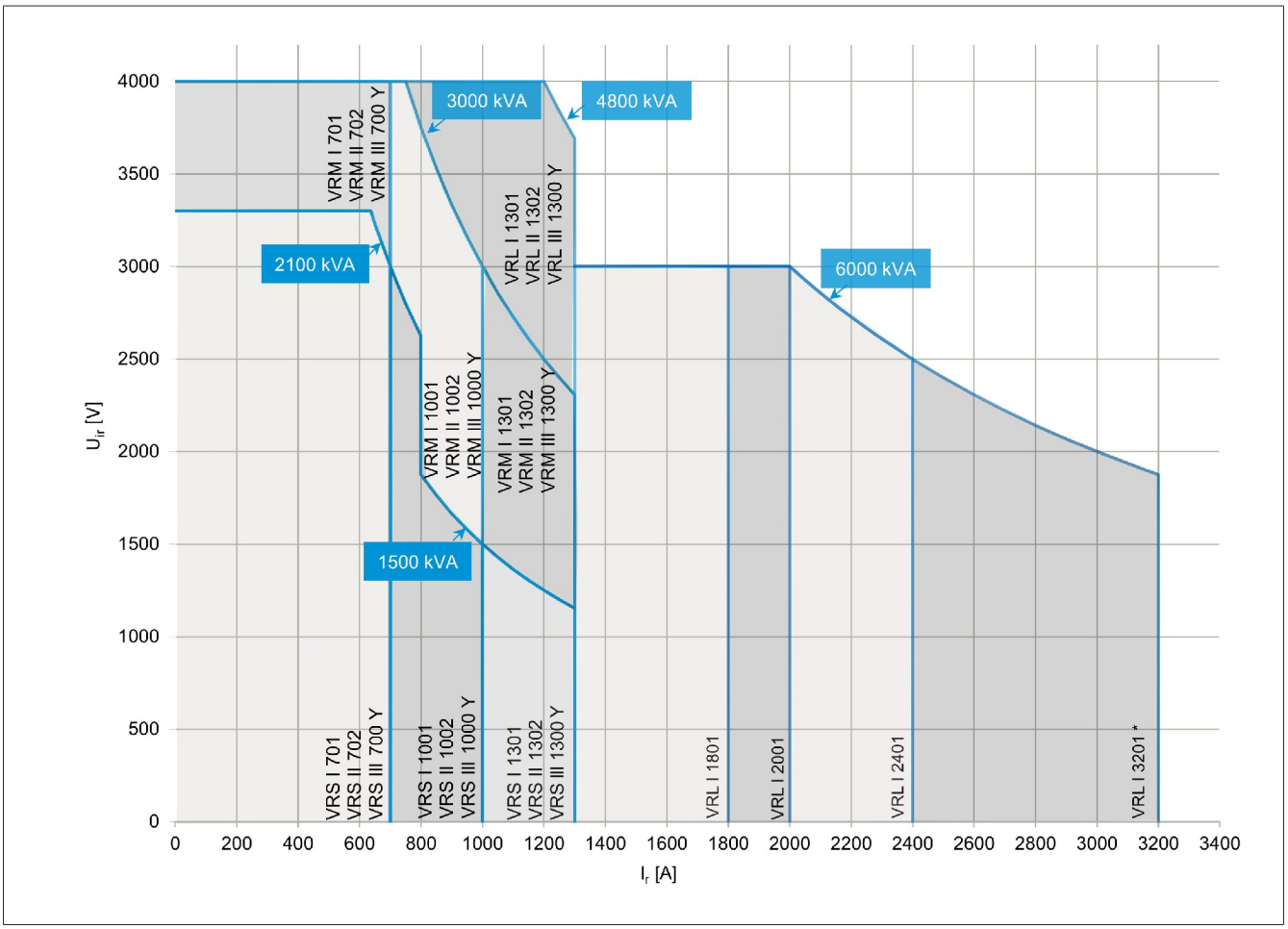

図 7: ステップ容量（定格電圧 U_{ir}、定格通過電流 I_r）、*印付きの負荷時タップ切換器タイプはご要望により生産いたします。

2.4 許容電圧ストレス

このセクションでは、OLTCの許容電圧ストレスについて説明します。

OLTCを選択する場合、最大電圧が絶縁距離に関係する定格耐電圧を超えていないことを確認する必要があります。

2.4.1 絶縁距離（多段の転位切換の副切換器および選択器サイズRESを除く）

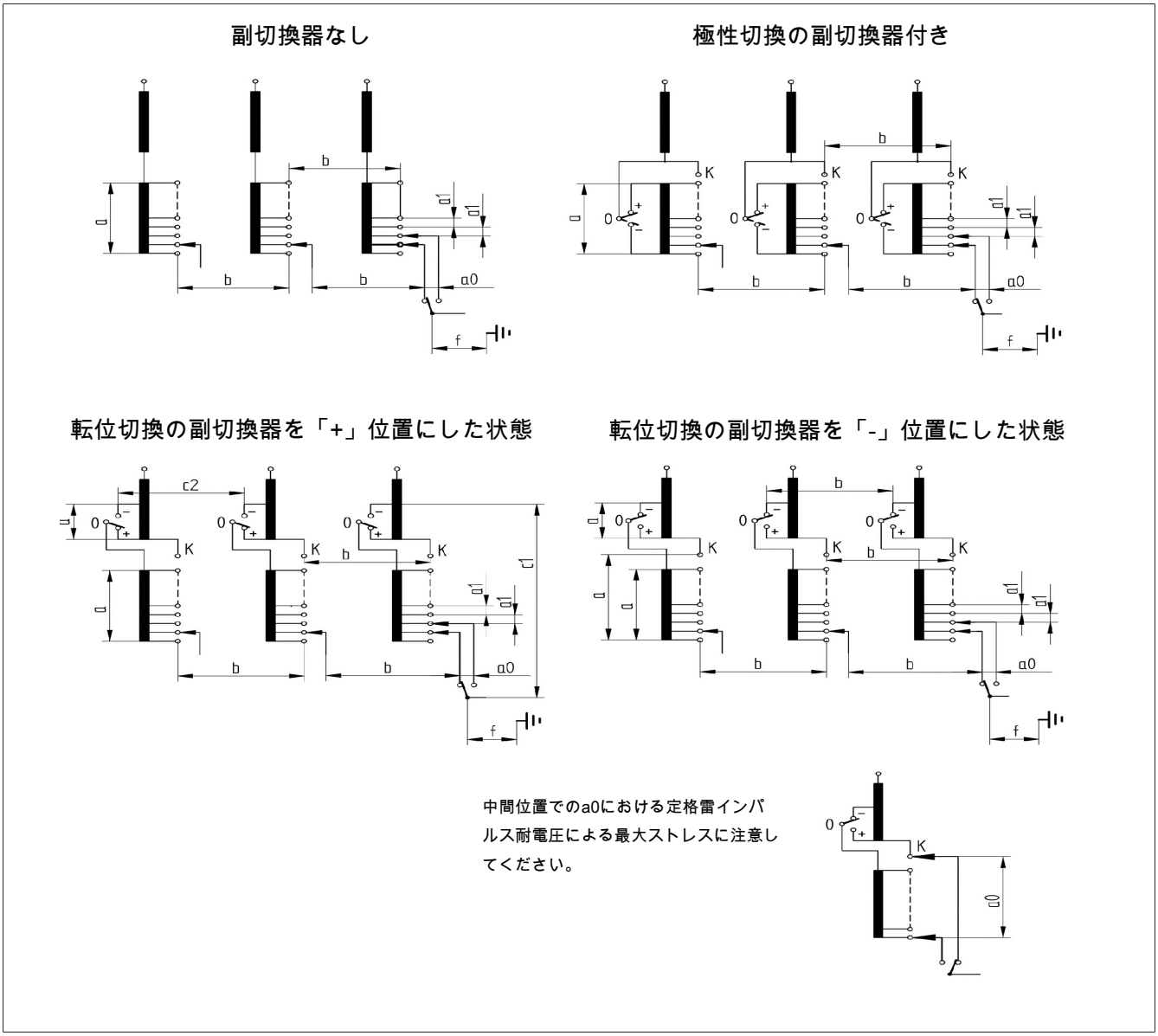

図 8: 選択器サイズRC、RD、RDE、RE、RFおよびB、C、D、DEの絶縁距離 (多段の転位切換の副切換器適用時は除く)

a0	切換開閉器の選択タップと事前選択タップの間
a1	１つのタップ位置の巻線のタップ選択器接点の間（接続済みまたは未接続）
a	タップ巻線の始点と終点の間、および粗巻線モデルの場合は、粗巻線の始点と終点の間 副切換器の位置（-）での転位切換器の接続に関する注意： 特にインパルス電圧でストレスを受けた場合、Kタップ選択器接点に接続された粗巻線の端と、同相のタップ巻線の端におけるタップ選択器接点の間の許容耐電圧「a」を遵守する必要があります。

b	異なる相のタップ選択器接点の間、およびタップ巻線の始点/終点またはタップ選択器接点に接続された異なる相の副切換器接点の間
f	切換開閉器出力端子と大地間
また、副切換器の位置（+）での転位切換器の接続の場合：	
c1	1つの副切換器接点（-）から同位相の接続線まで
c2	異なる相の副切換器の（-）端子間

定格絶縁レベルの略語：

LI	全波雷インパルス（kV、1.2/50 µs）
LIC	裁断波雷インパルス（kV、1.2/50/3 µs）
SI	開閉インパルス電圧（kV、250/2500 µs）
AC	印加電圧（kV、50 Hz、1 min）

切換開閉器の定格絶縁レベル

絶縁距離f				
U_m [1)]	LI	LIC	SI	AC
72.5	350	385	-	140
123	550	605	460	230
170	750	825	620	325
245	1 050	1 155	850	460
300[2)]	1 050	1 155	850	460
362[2)]	1 175	1 290	950	510
420[3)]	1 425	1 570	1 175	630

表 12: 切換開閉器の定格絶縁レベル

[1)] IEC 60214-1に準拠：3相システムでの位相間電圧の実効値が最も高く、その絶縁に対してOLTCが設計されています。

[2)] 単相OLTCと2相OLTCのみ

[3)] 単相OLTCのみ

R形選択器の内部絶縁の定格絶縁レベル（選択器サイズRESを除く）

個々の選択器距離で許容される最大動作電圧は、商用周波印加電圧(AC)について以下に示す値の半分に相当します。

絶縁距離		選択器サイズ					
		RC	RD	RDE	RE	RF	E
a0	LI	150[2)]					
	LIC	165[2)]					
	SI	100[2)]					
	AC	20					

絶縁距離		選択器サイズ					
		RC	RD	RDE	RE	RF	E
a1	LI	150					
	LIC	165					
	SI	100					
	AC	30					
a	LI	400	500	550	670	670	670
	LIC	440	550	605	735	735	735
	SI	260	325	355	435	435	435
	AC	100	145	165	220	220	180
b1[1)]	LI	400	500	550	670	670	670
	LIC	440	550	605	735	735	735
	SI	260	325	355	435	435	435
	AC	120	160	180	220	280	180
c1	LI	550	590	660	900	900	820
	LIC	605	645	725	990	990	900
	SI	355	385	430	585	585	535
	AC	180	210	250	320	320	250
c2[1)]	LI	550	590	660	930	1 000	820
	LIC	605	645	725	1 020	1 100	900
	SI	355	385	528	605	650	535
	AC	195	230	280	340	370	280

表 13: R形選択器の内部絶縁の定格絶縁レベル

[1)] 単相OLTCには適用されません。

[2)] 1.2/50 µ sの雷インパルスにおけるバリスタ応答電圧：45 kV（$U_{100\%}(t)_{規約} \neq U_{75\%}(t)_{規約}$）、ピーク耐電流3 kAにおける残留電圧：56 kV

M形選択器の内部絶縁の定格絶縁レベル (多段の転位切換の副切換器がない構成)

個々の選択器距離で許容される最大動作電圧は、商用周波印加電圧(AC)について以下に示す値の半分に相当します。

絶縁距離		選択器サイズ			
		B	C	D	DE
a0	LI	150[2)]			
	LIC	165[2)]			
	SI	100[2)]			
	AC	20			

絶縁距離		選択器サイズ			
		B	C	D	DE
a1	LI	150			
	LIC	165			
	SI	100			
	AC	30			
a	LI	265	350	490	550
	LIC	295	385	540	605
	SI	175	230	320	360
	AC	50	82	105	120
b1[1)]	LI	265	350	490	550
	LIC	295	385	540	605
	SI	175	230	320	360
	AC	50	82	146	160
c1	LI	485	545	590	660
	LIC	535	600	650	725
	SI	315	355	385	430
	AC	143	178	208	230
c2[1)]	LI	495	550	590	660
	LIC	545	605	650	725
	SI	325	360	385	430
	AC	150	182	225	250

表 14: M形選択器の内部絶縁の定格絶縁レベル

[1)] 単相OLTCには適用されません。

[2)] 1.2/50 µ sの雷インパルスにおけるバリスタ応答電圧：45 kV（$U_{100\%}(t)_{規約} \neq U_{75\%}(t)_{規約}$）、ピーク耐電流3 kAにおける残留電圧：56 kV

2.4.2 多段の転位切換の副切換器を使用した選択器サイズB、C、Dの絶縁距離

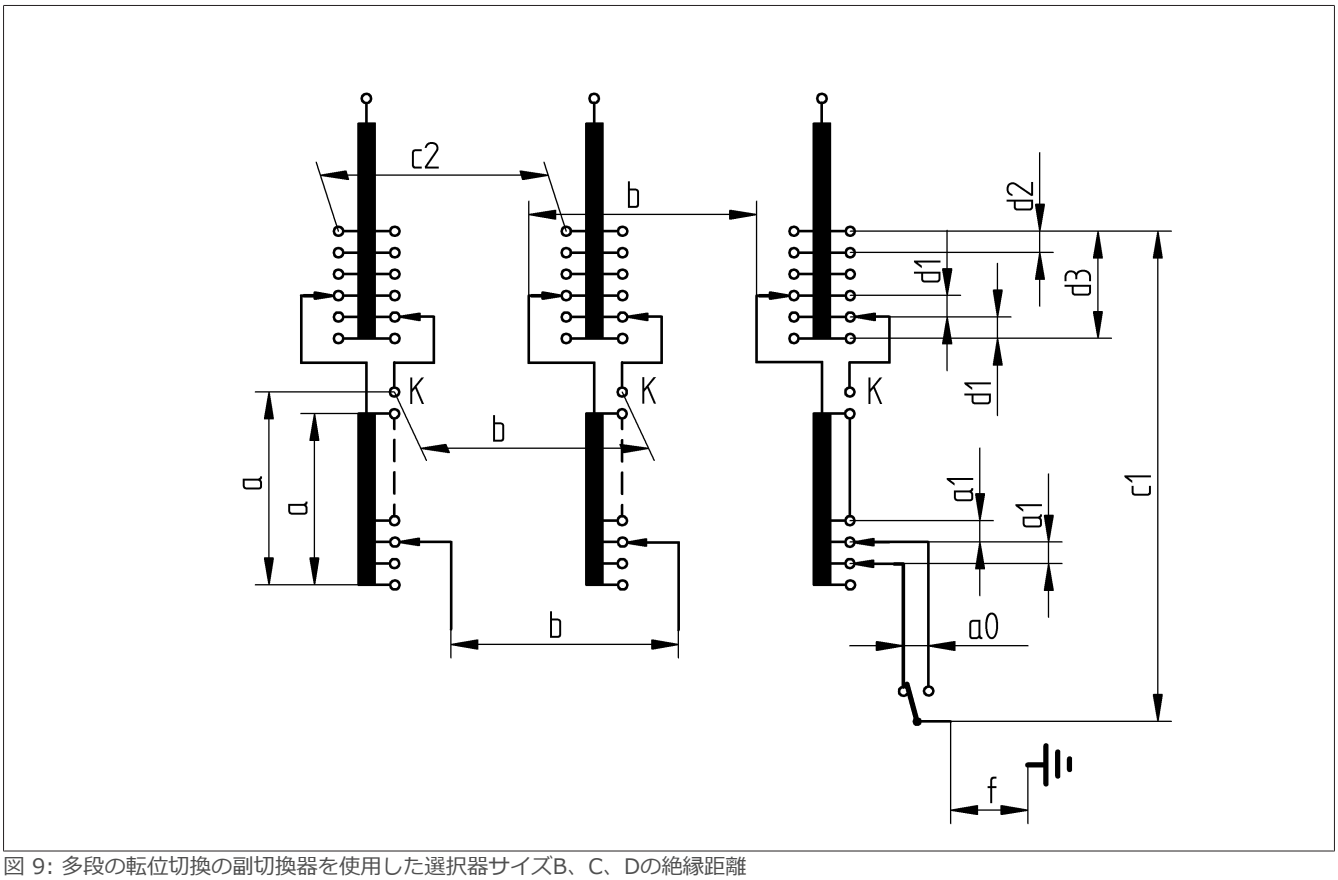

図 9: 多段の転位切換の副切換器を使用した選択器サイズB、C、Dの絶縁距離

a0	切換開閉器の選択タップと事前選択タップの間
a1	１つのタップ位置の巻線のタップ選択器接点の間（接続済みまたは未接続）
a	タップ巻線の始点と終点の間、および接続されたK接点と同相のタップ巻線の任意の点の間
b	異なる相のタップ選択器接点の間、およびある相の接続されたK接点と他の相のタップ巻線の任意の点の間
c1	任意の粗タップ端子と同相の切換開閉器出力端子間
c2	異なる相の接続されていない同じ名前の粗タップ端子間
d1	1つの相で、接続された粗タップ接点と隣接する粗タップ接点の間
d2	同一相の隣接する接続されていない粗タップ接点の間
d3	一つの相の全ての転位切換接続点の始点と終点の間
f	切換開閉器出力端子と大地間

絶縁距離fは、切換開閉器の定格絶縁レベルを参照 [▶ページ 19]

多段の転位切換の副切換器を備えたM形選択器の内部絶縁の定格絶縁レベル

個々の選択器距離で許容される最大動作電圧は、商用周波印加電圧(AC)について以下に示す値の半分に相当します。

絶縁距離		選択器サイズ		
		B	C	D
a0	LI	150[2)]		
	LIC	165[2)]		
	SI	100[2)]		
	AC	20		
a1	LI	150		
	LIC, SI	問い合わせ		
	AC	30		
a	LI	265	350	450
	LIC, SI	問い合わせ		
	AC	50	82	105
b[1)]	LI	265	350	450
	LIC, SI	問い合わせ		
	AC	50	82	146
c1	LI	455	525	590
	LIC, SI	問い合わせ		
	AC	127	165	210
c2[1)]	LI	455	525	590
	LIC, SI	問い合わせ		
	AC	127	165	215
d1	LI	265	350	450
	LIC, SI	問い合わせ		
	AC	50	82	105
d2	LI	350	450	450
	LIC, SI	問い合わせ		
	AC	82	105	105
d3	LI	350	450	490
	LIC, SI	問い合わせ		
	AC	82	105	120

表 15: 多段の転位切換の副切換器を備えたM形選択器の内部絶縁の定格絶縁レベル

[1)] 単相OLTCには適用されません。

[2)] 1.2/50 μ sの雷インパルスにおけるバリスタ応答電圧：45 kV（$U_{100\%}(t)_{規約} \neq U_{75\%}(t)_{規約}$）、ピーク耐電流3 kAにおける残留電圧：70 kV

2.4.3 選択器サイズ RES の絶縁距離

極性切換の副切換器の絶縁距離

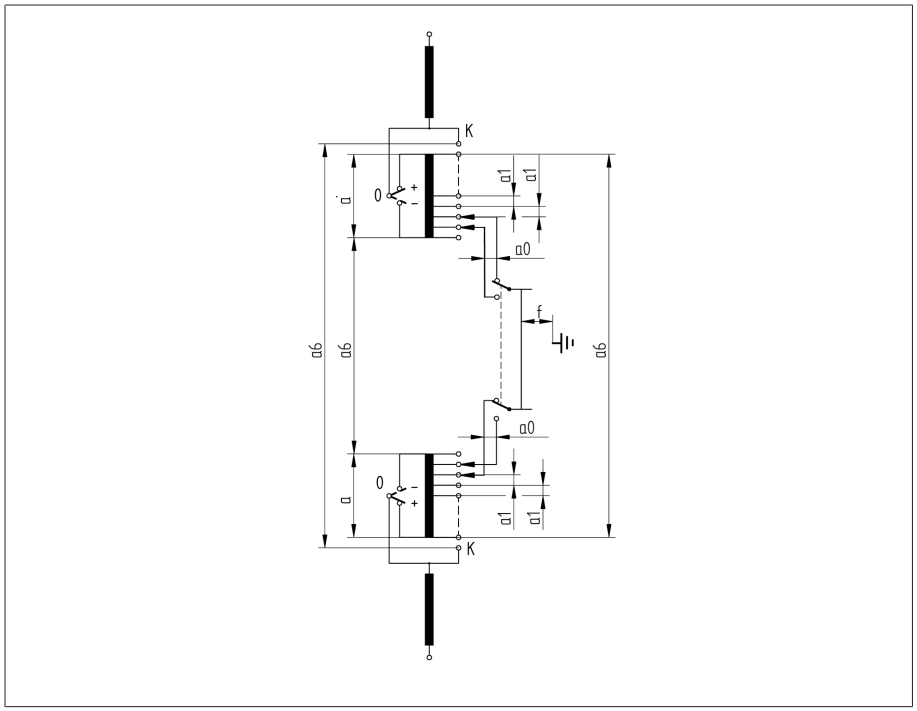

図 10: サイズ RES の極性切換の副切換器の絶縁距離

a0	切換開閉器の選択タップと事前選択タップの間
a1	１つのタップ位置の巻線のタップ選択器接点の間（接続済みまたは未接続）
a	タップ巻線の始点と終点の間
a6	異なるタップ巻線のタップ選択器接点の間、及びタップ巻線の始点/終点またはタップ選択器接点に接続された、異なるタップ巻線の副切換器接点の間
f	切換開閉器出力端子と大地間

絶縁距離fは、切換開閉器の定格絶縁レベルを参照 [▶ページ 19]

転位切換の副切換器の絶縁距離

転位切換の副切換器を「+」位置にした状態

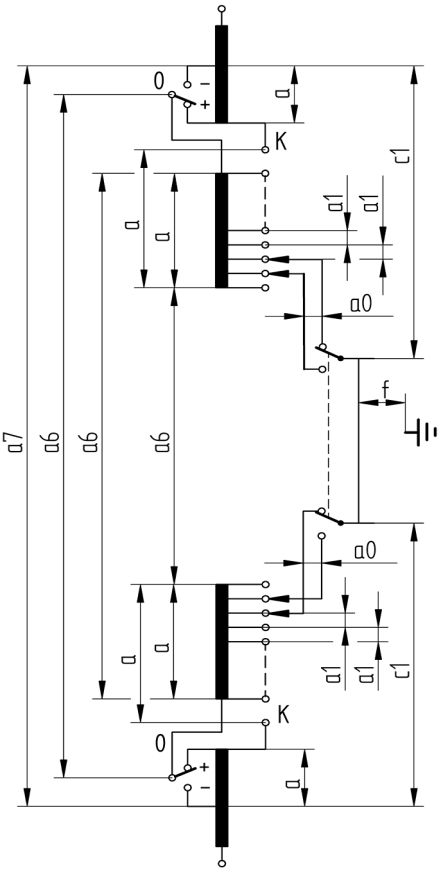

転位切換の副切換器を「-」位置にした状態

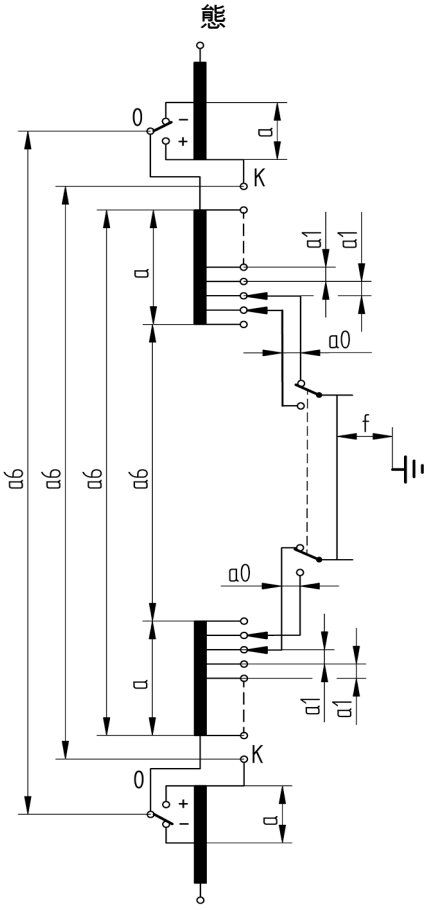

中間位置でのa0における定格雷インパルス耐電圧による最大ストレスに注意してください。

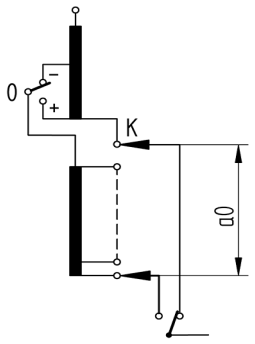

図 11: サイズ RES の転位切換の副切換器の絶縁距離

a0	切換開閉器の選択タップと事前選択タップの間
a1	１つのタップ位置の巻線のタップ選択器接点の間（接続済みまたは未接続）
a	タップ巻線の始点と終点の間、および粗巻線の始点と終点の間 副切換器の位置（-）での転位切換器の接続に関する注意： インパルス電圧で応力を受けた場合、Kタップ選択器接点に接続された粗巻線の端と、同相の対応するタップ巻線の端のタップ選択器接点の間の許容耐電圧「a」を遵守する必要があります。

a6	異なるタップ巻線のタップ選択器接点の間、及びタップ巻線の始点/終点またはタップ選択器接点に接続された、異なる粗巻線の副切換器接点の間
f	切換開閉器出力端子と大地間
また、副切換器の位置（+）での転位切換器の接続の場合：	
c1	副切換器の（-）端子から集電端子まで
a7	副切換器の接点（-）端子間

絶縁距離fは、切換開閉器の定格絶縁レベルを参照 [▶ページ 19]

選択器サイズRESの内部絶縁の定格絶縁レベル

個々の選択器距離で許容される最大動作電圧は、商用周波印加電圧(AC)について以下に示す値の半分に相当します。

絶縁距離		選択器サイズ	絶縁距離		選択器サイズ
		RES			RES
a0	LI	150[1)]	a6	LI	1 000
	LIC	165[1)]		LIC	1 100
	SI	100[1)]		SI	650
	AC	20		AC	400
a1	LI	150	a7	LI	1 200
	LIC	165		LIC	1 320
	SI	100		SI	780
	AC	30		AC	500
a	LI	670	c1	LI	900
	LIC	735		LIC	990
	SI	435		SI	585
	AC	220		AC	320

表 16: R形選択器の内部絶縁の定格絶縁レベル

[1)] 1.2/50 µ sの雷インパルスにおけるバリスタ応答電圧：45 kV（$U_{100\%}(t)_{規約} \neq U_{75\%}(t)_{規約}$）、ピーク耐電流3 kAにおける残留電圧：56 kV

2.5 実現可能な接続

R形選択器、選択器サイズRC/RD/RDE/RE/RFとの組み合わせで実現可能なVACUTAP® VRの接続

以下に示す接続は、極性切換器と3つの中間位置(3W)を持つ副切換器、および転位切換器と3つの中間位置(3G)を持つ副切換器でも実現できます。

副切換器なし		極性反転の副切換器付き		粗副切換器付き	
タップ切換動作	選択器サイズ	タップ切換動作	選択器サイズ	タップ切換動作	選択器サイズ
10050	RC/RD/RDE/RE/RF	10071W	RC/RD/RDE	10071G	RC/RD/RDE
10060	RC/RD/RDE/RE/RF	10081W	RC/RD/RDE	10081G	RC/RD/RDE
10070	RC/RD/RDE/RE/RF	10091W	RC/RD/RDE	10091G	RC/RD/RDE
10080	RC/RD/RDE/RE/RF	12101W	RC/RD/RDE	12101G	RC/RD/RDE
10090	RC/RD/RDE/RE/RF	14111W	RC/RD/RDE	14111G	RC/RD/RDE
10100	RC/RD/RDE/RE/RF	14121W	RC/RD/RDE	14121G	RC/RD/RDE
12110	RC/RD/RDE/RE/RF	16131W	RC/RD/RDE	16131G	RC/RD/RDE
12120	RC/RD/RDE/RE/RF	16141W	RC/RD/RDE	16141G	RC/RD/RDE
14130	RC/RD/RDE/RE/RF	18151W	RC/RD/RDE	18151G	RC/RD/RDE
14140	RC/RD/RDE/RE/RF	18161W	RC/RD/RDE	18161G	RC/RD/RDE
16150	RC/RD/RDE/RE/RF	10191W	RC/RD/RDE/RE/RF	10191G	RC/RD/RDE/RE/RF
16160	RC/RD/RDE/RE/RF	12231W	RC/RD/RDE/RE/RF	12231G	RC/RD/RDE/RE/RF
18170	RC/RD/RDE/RE/RF	14271W	RC/RD/RDE/RE/RF	14271G	RC/RD/RDE/RE/RF
18180	RC/RD/RDE/RE/RF	16311W	RC/RD/RDE/RE/RF	16311G	RC/RD/RDE/RE/RF
		18351W	RC/RD/RDE/RE/RF	18351G	RC/RD/RDE/RE/RF

表 17: R形選択器、選択器サイズRC/RD/RDE/RE/RFとの組み合わせで実現可能なVACUTAP® VRの接続

接続12111W(G) に準拠した選択器は、14111W(G)として実現します。

接続14131W(G) に準拠した選択器は、16131W(G)として実現します。

接続16151W(G) に準拠した選択器は、18151W(G)として実現します。

接続18171W(G)に準拠した選択器は実現できません。

選択器サイズRESは、3W/3Gの構成でのみ使用でき、10193W(G)–18353W(G) の接続で実現できます。

R形選択器、選択器サイズEとの組み合わせで実現可能なVACUTAP® VRの接続

極性反転の副切換器付き		粗副切換器付き	
タップ切換動作	選択器サイズ	タップ切換動作	選択器サイズ
10071W	E	10071G	E
10081W	E	10081G	E
10091W	E	10091G	E
12101W	E	12101G	E

極性反転の副切換器付き		粗副切換器付き	
12111W	E	12111G	E
14121W	E	14121G	E
14131W	E	14131G	E
16141W	E	16141G	E
18151W	E	18151G	E
18161W	E	18161G	E
10191W	E	10191G	E
12231W	E	12231G	E
14271W	E	14271G	E
16311W	E	16311G	E
18351W	E	18351G	E

表 18: R形選択器、選択器サイズEとの組み合わせで実現可能なVACUTAP® VRの接続

接続10091Wに準拠した選択器は、18091Wとして実現されます。

接続12111Wに準拠した選択器は、18111Wとして実現されます。

接続14131Wに準拠した選択器は、18131Wとして実現されます。

M形選択器、選択器サイズB/C/D/DEとの組み合わせで実現可能なVACUTAP® VRの接続

以下に示す接続は、極性切換器と3つの中間位置(3W)を持つ副切換器、および転位切換器と3つの中間位置(3G)を持つ副切換器でも実現できます。

副切換器なし		極性反転の副切換器付き		粗副切換器付き	
タップ切換動作	選択器サイズ	タップ切換動作	選択器サイズ	タップ切換動作	選択器サイズ
10050	B/C/D/DE	10071W	B/C/D/DE	10071G	B/C/D/DE
10060	B/C/D/DE	10081W	B/C/D/DE	10081G	B/C/D/DE
10070	B/C/D/DE	10091W	B/C/D/DE	10091G	B/C/D/DE
10080	B/C/D/DE	12101W	B/C/D/DE	12101G	B/C/D/DE
10090	B/C/D/DE	12111W	B/C	12111G	B/C
10100	B/C/D/DE	14111W	D/DE	14111G	D/DE
12110	B/C/D/DE	14121W	B/C	14121G	B/C
12120	B/C/D/DE	14131W	B/C	14131G	B/C
14130	B/C/D/DE	16121W	D/DE	16121G	D/DE
14140	B/C/D/DE	16131W	D/DE	16131G	D/DE
16150	B/C/D/DE	16141W	B/C/D/DE	16141G	B/C/D/DE
16160	B/C/D/DE	16151W	B/C	16151G	B/C
18170	B/C/D/DE	18151W	D/DE	18151G	D/DE
18180	B/C/D/DE	18161W	B/C	18161G	B/C
		18171W	B/C	18171G	B/C
		10191W	B/C/D/DE	10191G	B/C/D/DE

副切換器なし		極性反転の副切換器付き		粗副切換器付き	
タップ切換動作	選択器サイズ	タップ切換動作	選択器サイズ	タップ切換動作	選択器サイズ
		12231W	B/C/D/DE	12231G	B/C/D/DE
		14271W	B/C/D/DE	14271G	B/C/D/DE
		16311W	B/C/D/DE	16311G	B/C/D/DE
		18351W	B/C/D/DE	18351G	B/C/D/DE

表 19: M形選択器、選択器サイズB/C/D/DEとの組み合わせで実現可能なVACUTAP® VRの接続

2.6 タップ巻線の電位接続

切換動作中、タップ巻線は、極性切換もしくは転位切換の副切換器によって、短時間、主巻線から電気的に絶縁されます。すると、隣接する巻線の電圧と、これらの巻線または接地された部品の結合容量から生じる電位を帯びます。

一方の接点は常にタップ巻線に接続され、もう一方の接点は常に主巻線に接続されているため、タップ巻線のこの電位の変化は、離れようとしている副切換器接点間に相応の電圧を発生させます。この電圧は回復電圧U_Wと呼ばれます。

副切換器の接点が離れる際、容量から発生する電流を遮断する必要があります。この電流は、前述のタップ巻線の結合容量に依存します。この電流は、遮断電流I_Sとして知られています。

回復電圧U_Wおよび遮断電流I_Sによっては、副切換器に許容できない放電痕が生じることがあります。回復電圧U_Wと遮断電流I_Sの許容範囲を以下に示します。

2.6.1 R形選択器の回復電圧と遮断電流

「アクティブガス抑制システム」（AGIS）は、副切換器動作中に発生するガス量を低減します。回復電圧および遮断電流の詳細については、技術データTD 61の「一般情報」を参照してください。

電位固定用抵抗器がない時の回復電圧U_Wおよび遮断電流I_s

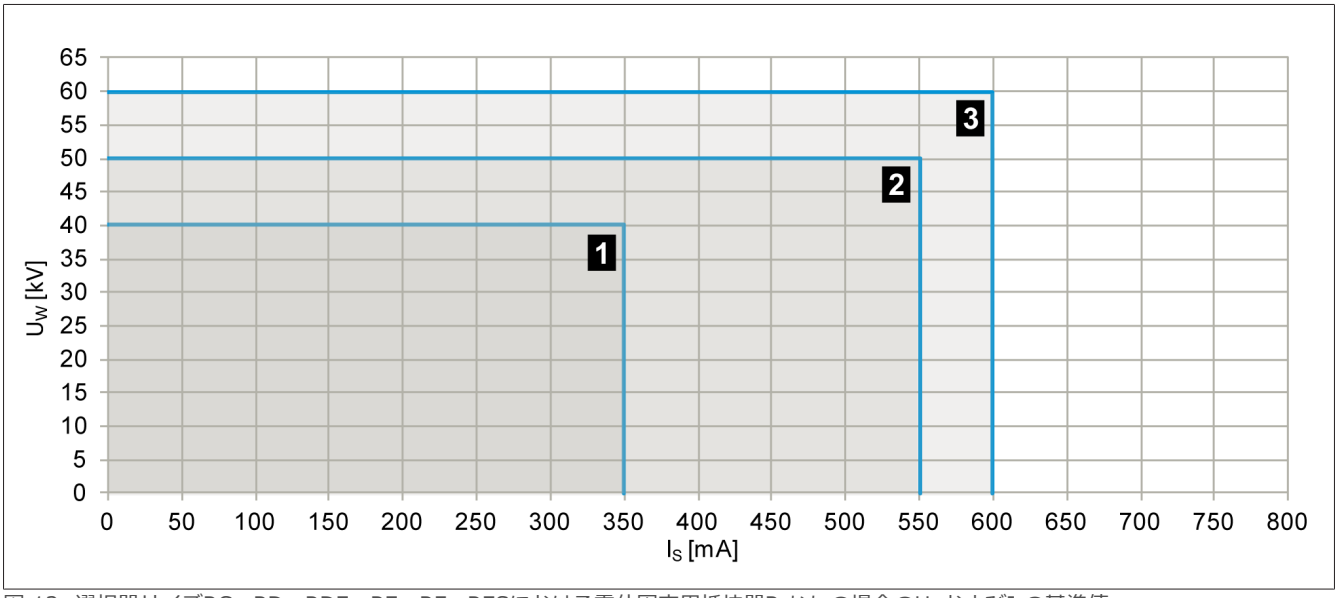

図 12: 選択器サイズRC、RD、RDE、RE、RF、RESにおける電位固定用抵抗器R_pなしの場合のU_WおよびI_Sの基準値

1	AGISなしの選択器サイズRC、RD、RDE	2	AGIS付きの選択器サイズRC、RD、RDE
3	選択器サイズRE、RF、RES（AGIS付きのみ）		

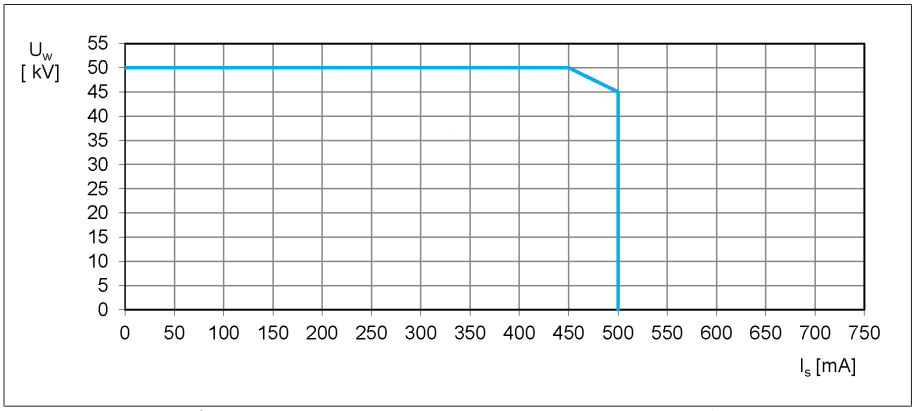

図 13: 選択器サイズEにおける電位固定用抵抗器R_Pなしの場合のU_WおよびI_Sの基準値

電位固定用抵抗器がある時の回復電圧U_Wおよび遮断電流I_s

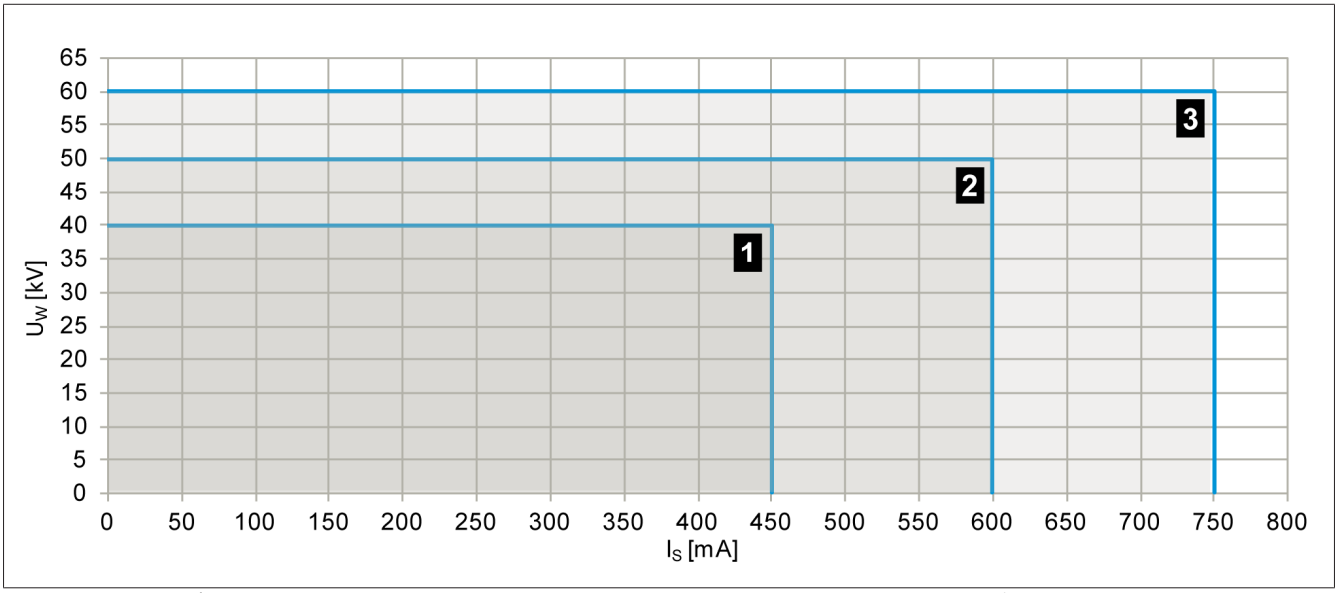

図 14: 選択器サイズRC、RD、RDE、RE、RF、RESにおける電位固定用抵抗器R_P付きの場合のU_WおよびI_Sの基準値

1	AGISなしの選択器サイズRC、RD、RDE	2	AGIS付きの選択器サイズRC、RD、RDE
3	選択器サイズRE、RF、RES（AGIS付きのみ）		

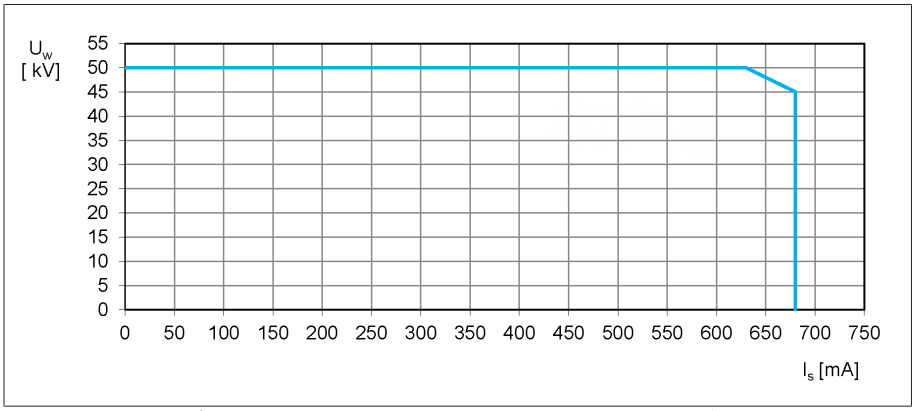

図 15: 選択器サイズEにおける電位固定用抵抗器R_Pありの場合のU_WおよびI_Sの基準値

2.6.2 M形選択器の回復電圧と遮断電流

回復電圧および遮断電流の詳細については、技術データ TD 61 の一般情報を参照してください。

電位固定用抵抗器がない時の回復電圧U_Wおよび遮断電流I_s

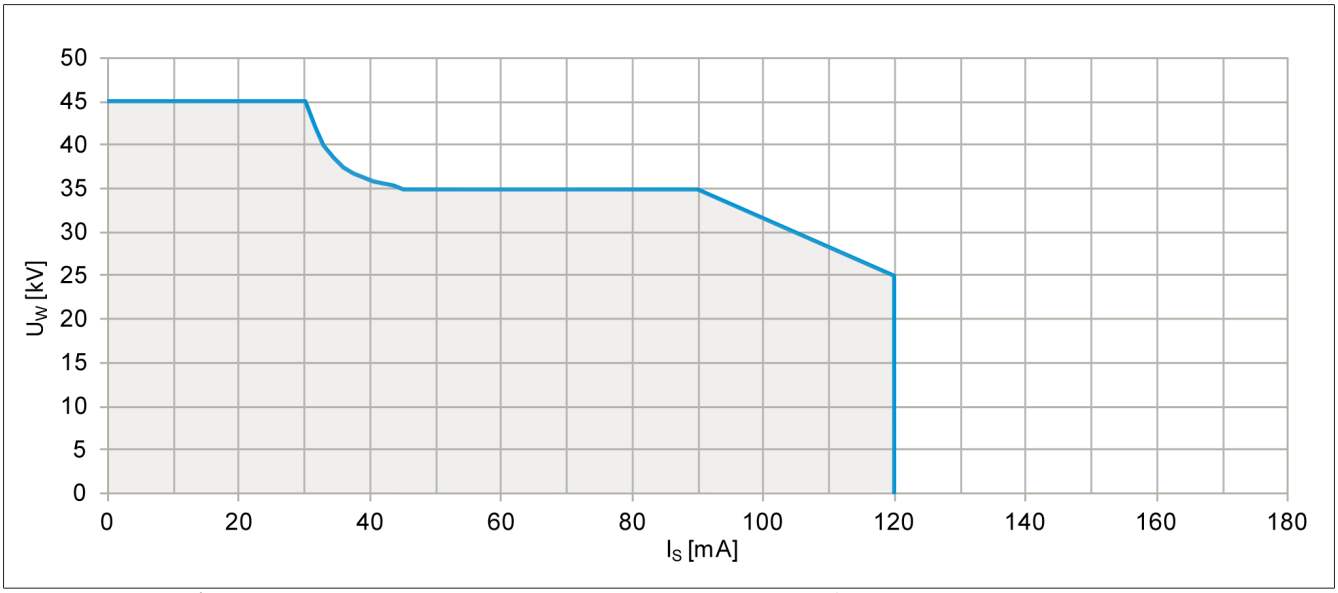

図 16: 選択器サイズB、C、D、DEにおける電位固定用抵抗器R_pなしの場合のU_WおよびI_Sの基準値

電位固定用抵抗器がある時の回復電圧U_Wおよび遮断電流I_s

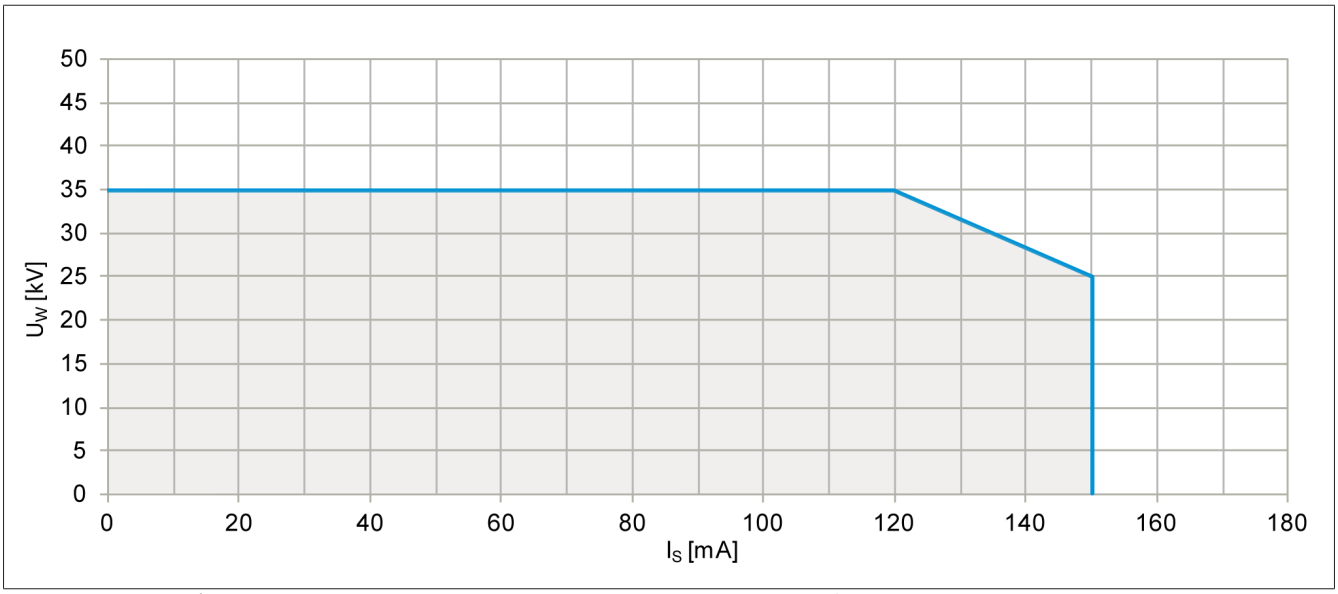

図 17: 選択器サイズB、C、D、DEにおける電位固定用抵抗器R_p付きの場合のU_WおよびI_Sの基準値

3 特殊設計

3.1 デルタ接続用のOLTCの組み合わせ

単相OLTCを2相OLTCと組み合わせることで、変圧器巻線をデルタ接続とすることができます。この2つのOLTCの組み合わせを、「VR III K」（Kはドイツ語の「Kombination」）と呼んでいます。

以下のOLTCの組み合わせが利用できます。
- VRS I 701/VRS II 702
- VRS I 1001/VRS II 1002
- VRS I 1301/VRS II 1302
- VRM I 701/VRM II 702
- VRM I 1001/VRM II 1002
- VRM I 1301/VRM II 1302
- VRL I 1301/VRL II 1302
- VRH I 651/VRH II 652
- VRH I 1301/VRH II 1302

このために、以下に示すようなタップ巻線を準備する必要があります。

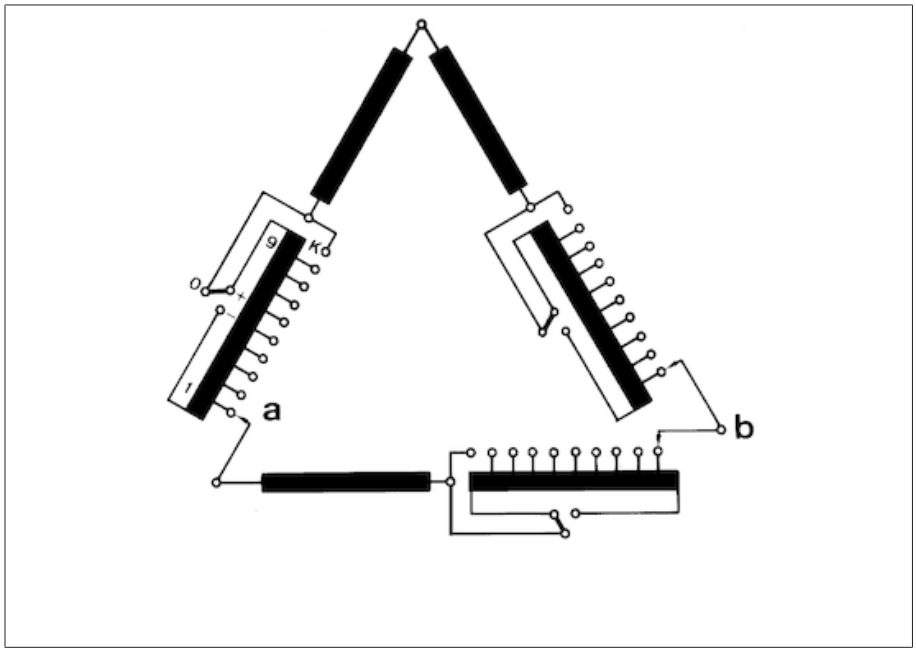

図 18: デルタ接続用のOLTCの組み合わせ VR III K ‥ VRS I 701/VRS II 702 (a = VRS I 701, b = VRS II 702)

3.2 多段の転位切換の副切換器を備えたOLTC

非常に細かい電圧設定には、多数の運転位置が必要であり、多段の転位切換の構成でしか実現できない場合があります。

例えば、5つの粗タップ巻線と18タップのタップ巻線を使用して、107の運転位置を得ることができます。

多段の転位切換の副切換器は、タップ選択器の両側に取り付けられています。

OLTCは、U_m = 72.5から最大300 kVまでの電圧範囲に適用可能で、2 ～5（選択器サイズB、C）または2 ～ 3（選択器サイズD）の転位切換接続に対応可能です。

3.3 中性点が非接地のスター接続用のOLTC

OLTCに非接地の中性点がある場合、非接地の中性点に接続できるのは変流器のみです。そうしないと、中性点にて許容できない過電圧が発生します。

> リアクトルは接続できません。

3つの油槽の出力接点の接続（= 非接地の中性点）	VACUTAP® VRS/VRM/VRL III 700/1000/1300/1600 Y VACUTAP® VRH III 650/1300 Y	
OLTCの外側での変流器の接続および中性点の形成	A) 油槽の出力接点間で許容される試験電圧	
	– 定格雷インパルス耐電圧	< 140 kV (1.2/50 µS)[1)]
	– 短時間商用周波耐電圧の定格値	1 kV (50 Hz, 1 min)
	B) 油槽の出力接点間の許容最大動作電圧	1 kV (50、60 Hz)
[1)] 1.2/50 µs雷インパルスでのバリスタ応答電圧：> 1.4 kV、1000 A（8/20 µs）ピーク耐電流での残留電圧：< 3 kV、バリスタの最大許容エネルギー負荷 < 100 J		

表 20: VACUTAP® VRS/VRM/VRL III 700/1000/1300/1600 YとVACUTAP® VRH III 650/1300 Yの許容試験電圧および動作電圧

4 図面

4.1 形式概要

MASCHINENFABRIK REINHAUSEN GMBH COPYRIGHT RESERVED
THE REPRODUCTION, DISTRIBUTION AND UTILIZATION OF THIS DOCUMENT AS WELL AS THE COMMUNICATION OF ITS CONTENTS TO OTHERS WITHOUT EXPRESS AUTHORIZATION IS PROHIBITED. OFFENDERS WILL BE HELD LIABLE FOR THE PAYMENT OF DAMAGES. ALL RIGHTS RESERVED IN THE EVENT OF THE GRANT OF A PATENT, UTILITY MODEL OR DESIGN.

WITHOUT CHANGE-OVER SELECTOR	0

WITH CHANGE-OVER SELECTOR (REVERSING / COARSE CHANGE-OVER SELECTOR)	W, G

VRS I 701
VRS I 1001
VRS I 1301

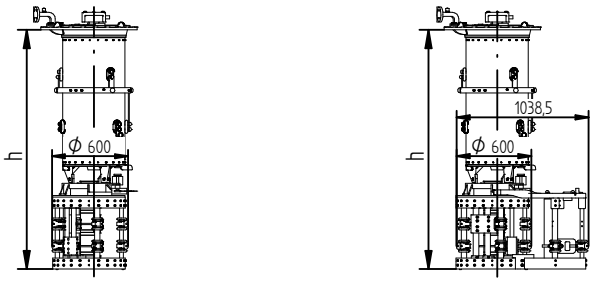

Um [kV]	h [mm]	
	SELECTOR SIZE	
	RC	RD / RDE
72,5	1837	1917
123	1967	2047
170	2097	2177
245	2197	2277
300	2349	2429
362	2452	2532
420	2571	2651

VRS II 702
VRS II 1002
VRS II 1302

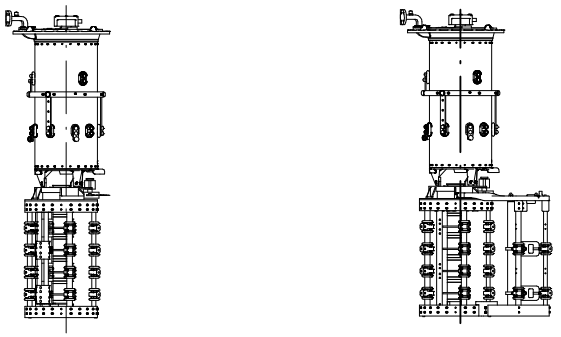

Um [kV]	h [mm]	
	SELECTOR SIZE	
	RC	RD / RDE
72,5	2177	2337
123	2307	2467
170	2437	2597
245	2537	2697
300	2689	2849
362	2792	2952

VRS I 2622

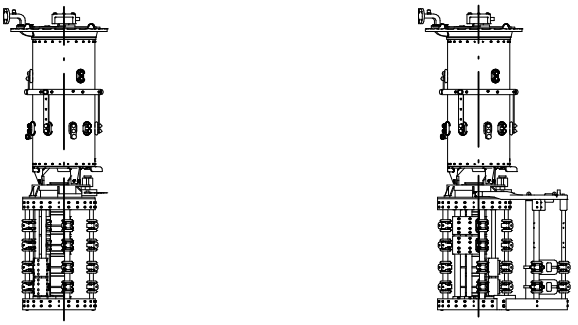

Um [kV]	h [mm]	
	SELECTOR SIZE	
	RC	RD / RDE
72,5	2137	2217
123	2267	2347
170	2397	2477
245	2497	2577
300	2649	2729
362	2752	2832
420	2871	2951

VRS III 700 Y
VRS III 1000 Y
VRS III 1300 Y

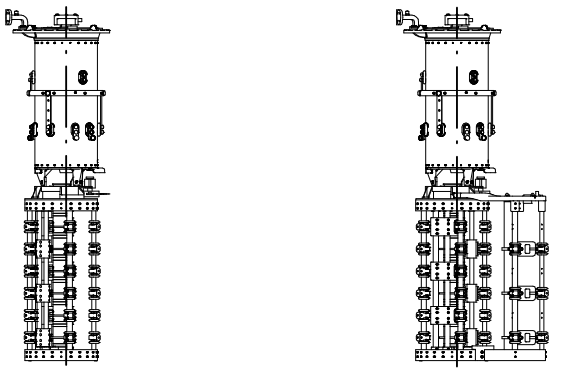

Um [kV]	h [mm]	
	SELECTOR SIZE	
	RC	RD / RDE
72,5	2517	2757
123	2647	2887
170	2777	3017
245	2877	3117

SELECTOR SIZE RC 72,5 kV DISPLAYED

	DATE	NAME	DOCUMENT NO.	
DFTR.	06.05.2021	RAEDLINGER	SED 5097372 001 03	
EHKO.	21.05.2021	HAUER	CHANGE NO.	SCALE
STAND	21.05.2021	WANNINGER	1106874	1:20

DIMENSION IN mm EXCEPT AS NOTED

ON-LOAD TAP-CHANGER VACUTAP® VR®
TYPE OVERVIEW VRS – SELECTOR SIZE RC/RD/RDE

SERIAL NUMBER

MATERIAL NUMBER 100174272E

SHEET 1/1

MASCHINENFABRIK REINHAUSEN GMBH COPYRIGHT RESERVED
THE REPRODUCTION, DISTRIBUTION AND UTILIZATION OF THIS DOCUMENT AS WELL AS THE COMMUNICATION OF ITS CONTENTS TO OTHERS WITHOUT EXPRESS AUTHORIZATION IS PROHIBITED. OFFENDERS WILL BE HELD LIABLE FOR THE PAYMENT OF DAMAGES. ALL RIGHTS RESERVED IN THE EVENT OF THE GRANT OF A PATENT, UTILITY MODEL OR DESIGN.

WITHOUT CHANGE-OVER SELECTOR	0

WITH CHANGE-OVER SELECTOR (REVERSING / COARSE CHANGE-OVER SELECTOR)	W, G

VRM I 701
VRM I 1001
VRM I 1301
VRH I 651

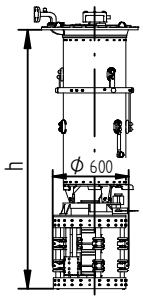

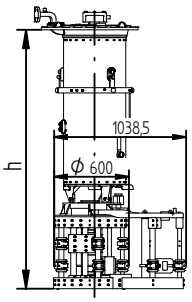

Um [kV]	h [mm]	
	SELECTOR SIZE	
	RC	RD / RDE
72,5	1988	2068
123	2118	2198
170	2248	2328
245	2348	2428
300	2500	2580
362	2603	2683
420	2722	2802

VRM II 702
VRM II 1002
VRM II 1302
VRH II 652

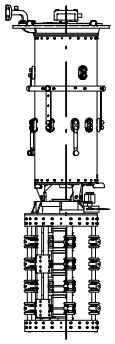

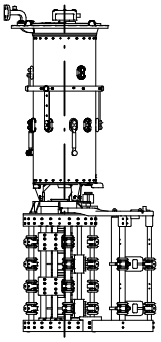

Um [kV]	h [mm]	
	SELECTOR SIZE	
	RC	RD / RDE
72,5	2328	2488
123	2458	2618
170	2588	2748
245	2688	2848
300	2840	3000
362	2943	3103

VRM I 2622

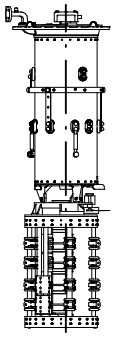

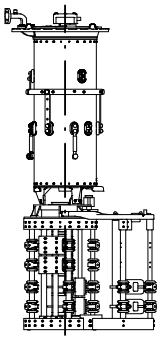

Um [kV]	h [mm]	
	SELECTOR SIZE	
	RC	RD / RDE
72,5	2288	2368
123	2418	2498
170	2548	2628
245	2648	2728
300	2800	2880
362	2903	2983
420	3022	3102

VRM III 700 Y
VRM III 1000 Y
VRM III 1300 Y
VRH III 650 Y

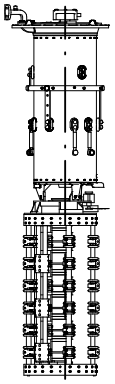

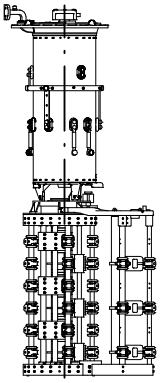

Um [kV]	h [mm]	
	SELECTOR SIZE	
	RC	RD / RDE
72,5	2668	2908
123	2798	3038
170	2928	3168
245	3028	3268

SELECTOR SIZE RC 72,5 kV DISPLAYED

	DATE	NAME	DOCUMENT NO.	
DFTR.	07.05.2021	RAEDLINGER	SED 5098990 001 02	
EHKD.	21.05.2021	HAUER	CHANGE NO.	SCALE
STAND	21.05.2021	WANNINGER	1106874	1:20

DIMENSION IN mm EXCEPT AS NOTED

ON-LOAD TAP-CHANGER VACUTAP® VR®
TYPE OVERVIEW VRM/H650 – SELECTOR SIZE RC/RD/RDE

SERIAL NUMBER

MATERIAL NUMBER 100174492E

SHEET 1/1

MASCHINENFABRIK REINHAUSEN GMBH COPYRIGHT RESERVED
THE REPRODUCTION, DISTRIBUTION AND UTILIZATION OF THIS DOCUMENT AS WELL AS THE COMMUNICATION OF ITS CONTENTS TO OTHERS WITHOUT EXPRESS AUTHORIZATION IS PROHIBITED. OFFENDERS WILL BE HELD LIABLE FOR THE PAYMENT OF DAMAGES. ALL RIGHTS RESERVED IN THE EVENT OF THE GRANT OF A PATENT, UTILITY MODEL OR DESIGN.

WITHOUT CHANGE-OVER SELECTOR	0

WITH CHANGE-OVER SELECTOR (REVERSING / COARSE CHANGE-OVER SELECTOR)	W, G

VRL I 1301
VRH I 1301

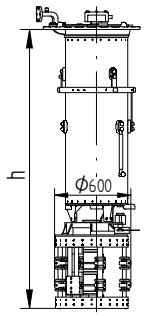

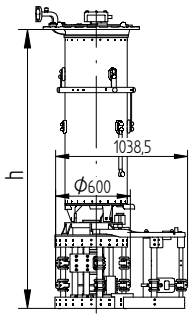

Um [kV]	h [mm]	
	SELECTOR SIZE	
	RC	RD / RDE
72,5	2140	2220
123	2270	2350
170	2400	2480
245	2500	2580
300	2652	2732
362	2755	2835
420	2874	2954

VRL II 1302
VRH II 1302

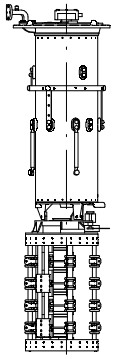

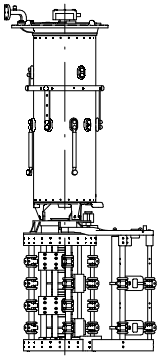

Um [kV]	h [mm]	
	SELECTOR SIZE	
	RC	RD / RDE
72,5	2480	2640
123	2610	2770
170	2740	2900
245	2840	3000
300	2992	3152
362	3095	3255

VRL I 2622
VRH I 2622
VRL I 1601

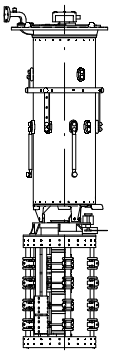

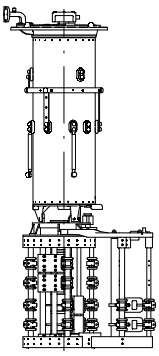

Um [kV]	h [mm]	
	SELECTOR SIZE	
	RC	RD / RDE
72,5	2440	2520
123	2570	2650
170	2700	2780
245	2800	2880
300	2952	3032
362	3055	3135
420	3174	3254

VRL III 1300 Y
VRH III 1300 Y

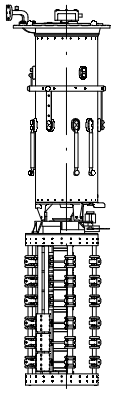

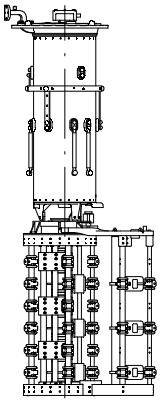

Um [kV]	h [mm]	
	SELECTOR SIZE	
	RC	RD / RDE
72,5	2820	3060
123	2950	3190
170	3080	3320
245	3180	3420

SELECTOR SIZE RC 72,5 kV DISPLAYED

	NAME	DOCUMENT NO.	
DFTR.	BUTERUS	SED 5099116 001 03	
CHKD.	WREDE	CHANGE NO.	SCALE
STAND.	KLEYN	1116192	1:20

DATE
26.07.2022
27.07.2022
27.07.2022

DIMENSION IN mm EXCEPT AS NOTED

ON-LOAD TAP-CHANGER VACUTAP® VR®
TYPE OVERVIEW VRL/H1300/1601 – SELECTOR SIZE RC/RD/RDE
DIMENSION DRAWING

SERIAL NUMBER

MATERIAL NUMBER 100174533E

SHEET 1/1

MASCHINENFABRIK REINHAUSEN GMBH COPYRIGHT RESERVED
THE REPRODUCTION, DISTRIBUTION AND UTILIZATION OF THIS DOCUMENT AS WELL AS THE COMMUNICATION OF ITS CONTENTS TO OTHERS WITHOUT EXPRESS AUTHORIZATION IS PROHIBITED. OFFENDERS WILL BE HELD LIABLE FOR THE PAYMENT OF DAMAGES. ALL RIGHTS RESERVED IN THE EVENT OF THE GRANT OF A PATENT, UTILITY MODEL OR DESIGN.

	WITHOUT CHANGE-OVER SELECTOR	0

	WITH CHANGE-OVER SELECTOR (REVERSING / COARSE CHANGE-OVER SELECTOR)	W, G

VRS I 701
VRS I 1001
VRS I 1301

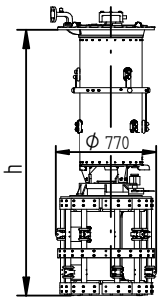

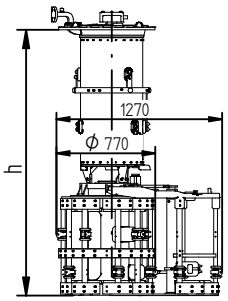

Um [kV]	h [mm] SELECTOR SIZE	
	RE	RF
72,5	2038	-
123	2168	-
170	2298	-
245	2398	-
300	2550	-
362	2653	-
420	2772	-

VRS II 702
VRS II 1002
VRS II 1302

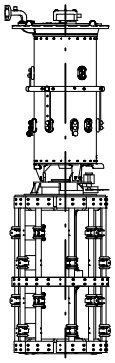

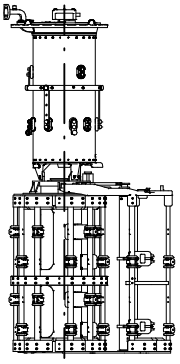

Um [kV]	h [mm] SELECTOR SIZE	
	RE	RF
72,5	2498	2578
123	2628	2708
170	2758	2838
245	2858	2938
300	3010	3090
362	3113	3193

VRS I 2622

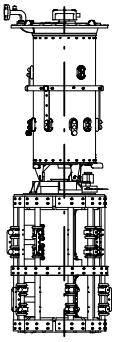

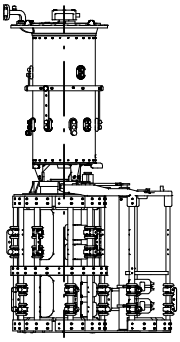

Um [kV]	h [mm] SELECTOR SIZE	
	RE	RF
72,5	2337	-
123	2467	-
170	2597	-
245	2697	-
300	2849	-
362	2952	-
420	3071	-

VRS III 700 Y
VRS III 1000 Y
VRS III 1300 Y

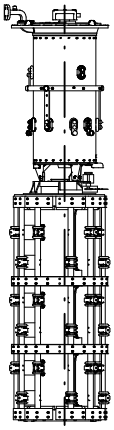

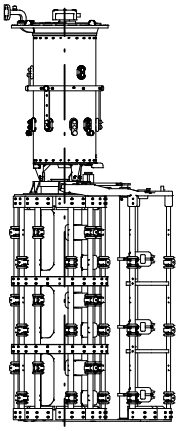

Um [kV]	h [mm] SELECTOR SIZE	
	RE	RF
72,5	3018	3178
123	3148	3308
170	3278	3438
245	3378	3538

RE 72,5 kV DISPLAYED

	NAME	DOCUMENT NO.	
DATE			
DFTR. 10.05.2021	RAEDLINGER	SED 5115917 001 01	
EHKO. 21.05.2021	HAUER	CHANGE NO.	SCALE
STAND. 21.05.2021	WANNINGER	1106874	1:20

DIMENSION IN mm EXCEPT AS NOTED

MR

ON-LOAD TAP-CHANGER VACUTAP® VR®
TYPE OVERVIEW VRS - RE/RF

SERIAL NUMBER
-

MATERIAL NUMBER
100175911E

SHEET
1/1

MASCHINENFABRIK REINHAUSEN GMBH COPYRIGHT RESERVED
THE REPRODUCTION, DISTRIBUTION AND UTILIZATION OF THIS DOCUMENT AS WELL AS THE COMMUNICATION OF ITS CONTENTS TO OTHERS WITHOUT EXPRESS AUTHORIZATION IS PROHIBITED. OFFENDERS WILL BE HELD LIABLE FOR THE PAYMENT OF DAMAGES. ALL RIGHTS RESERVED IN THE EVENT OF THE GRANT OF A PATENT, UTILITY MODEL OR DESIGN.

WITHOUT CHANGE-OVER SELECTOR	0

WITH CHANGE-OVER SELECTOR (REVERSING / COARSE CHANGE-OVER SELECTOR)	W, G

VRM I 701
VRM I 1001
VRM I 1301
VRH I 651

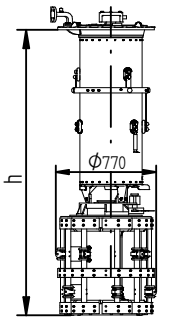

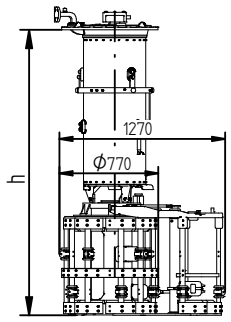

Um [kV]	h [mm] SELECTOR SIZE	
	RE	RF
72,5	2190	–
123	2320	–
170	2450	–
245	2550	–
300	2702	–
362	2805	–
420	2924	–

VRM II 702
VRM II 1002
VRM II 1302
VRH II 652

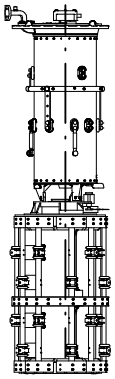

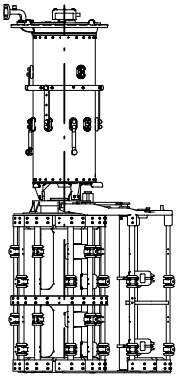

Um [kV]	h [mm] SELECTOR SIZE	
	RE	RF
72,5	2650	2730
123	2780	2860
170	2910	2990
245	3010	3090
300	3162	3242
362	3265	3345

VRM I 2622

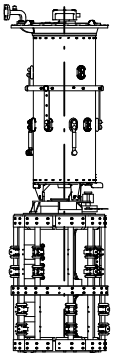

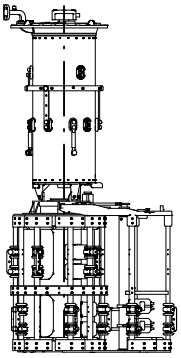

Um [kV]	h [mm] SELECTOR SIZE	
	RE	RF
72,5	2488	–
123	2618	–
170	2748	–
245	2848	–
300	3000	–
362	3103	–
420	3222	–

VRM III 700 Y
VRM III 1000 Y
VRM III 1300 Y
VRH III 650 Y
VRX I 652

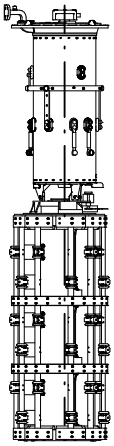

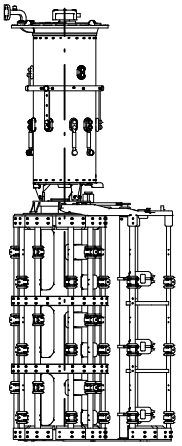

Um [kV]	h [mm] SELECTOR SIZE		
	RE	RF	RES
72,5	3170	3330	3168
123	3300	3460	3298
170	3430	3590	3428
245	3530	3690	3528
300	–	–	3680
362	–	–	3783
420	–	–	3902

RE 72,5 kV DISPLAYED

	DATE	NAME	DOCUMENT NO.	
DFTR.	10.05.2021	RAEDLINGER	SED 5117864 001 02	
EHKO.	21.05.2021	HAUER	CHANGE NO.	SCALE
STAND	21.05.2021	WANNINGER	1106874	1:20

DIMENSION IN mm EXCEPT AS NOTED

ON-LOAD TAP-CHANGER VACUTAP® VR®
TYPE OVERVIEW VRM/X/H650 – RE/RF/RES

SERIAL NUMBER
–

MATERIAL NUMBER
100176221E

SHEET
1/1

MASCHINENFABRIK REINHAUSEN GMBH COPYRIGHT RESERVED
THE REPRODUCTION, DISTRIBUTION AND UTILIZATION OF THIS DOCUMENT AS WELL AS THE COMMUNICATION OF ITS CONTENTS TO OTHERS WITHOUT EXPRESS AUTHORIZATION IS PROHIBITED. OFFENDERS WILL BE HELD LIABLE FOR THE PAYMENT OF DAMAGES. ALL RIGHTS RESERVED IN THE EVENT OF THE GRANT OF A PATENT, UTILITY MODEL OR DESIGN.

	WITHOUT CHANGE-OVER SELECTOR	0

	WITH CHANGE-OVER SELECTOR (REVERSING / COARSE CHANGE-OVER SELECTOR)	W, G

VRL I 1301
VRH I 1301

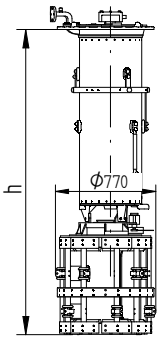

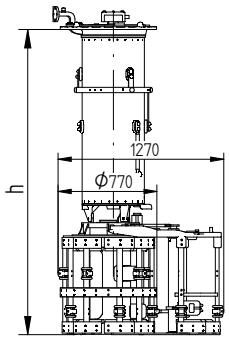

Um [kV]	h [mm] SELECTOR SIZE RE	RF
72,5	2341	-
123	2471	-
170	2601	-
245	2701	-
300	2853	-
362	2956	-
420	3075	-

VRL II 1302
VRH II 1302

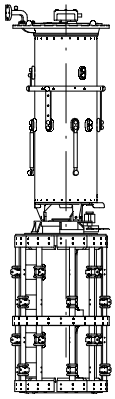

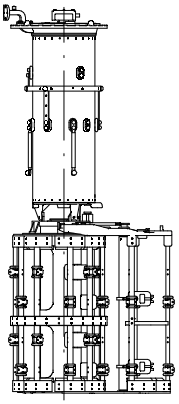

Um [kV]	h [mm] SELECTOR SIZE RE	RF
72,5	2801	2883
123	2931	3013
170	3061	3143
245	3161	3243
300	3313	3395
362	3416	3498

VRL I 2622
VRH I 2622
VRL I 1601

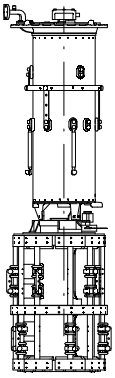

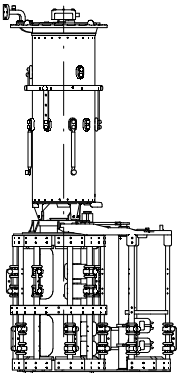

Um [kV]	h [mm] SELECTOR SIZE RE	RF
72,5	2640	-
123	2770	-
170	2900	-
245	3000	-
300	3152	-
362	3255	-
420	3374	-

VRL III 1300 Y
VRH III 1300 Y
VRX I 1302

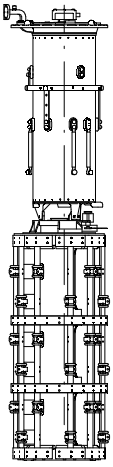

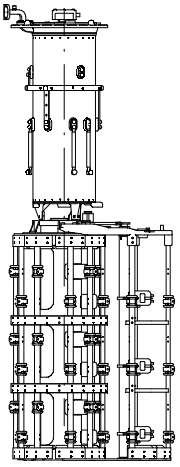

Um [kV]	h [mm] SELECTOR SIZE RE	RF	RES
72,5	3321	3481	3320
123	3451	3611	3450
170	3581	3741	3580
245	3681	3841	3680
300	-	-	3832
362	-	-	3935
420	-	-	4054

SELECTOR SIZE RE 72,5 kV REPRESENTED

	NAME	DOCUMENT NO.	
DFTR.	BUTERUS	SED 5119135 001 04	
CHKD.	WREDE	CHANGE NO.	SCALE
STAND.	KLEYN	1116192	1:20

DATE
02.08.2022
02.08.2022
02.08.2022

DIMENSION IN mm EXCEPT AS NOTED

ON-LOAD TAP-CHANGER VACUTAP® VR®
TYPE OVERVIEW VRL/VRH/VRX 1300/1601 – RE/RF/RES
DIMENSION DRAWING

SERIAL NUMBER
–
MATERIAL NUMBER 100176263E
SHEET 1/1

© MASCHINENFABRIK REINHAUSEN GMBH 2018
THE REPRODUCTION, DISTRIBUTION AND UTILIZATION OF THIS DOCUMENT AS WELL AS THE COMMUNICATION OF ITS CONTENTS TO OTHERS WITHOUT EXPRESS AUTHORIZATION IS PROHIBITED. OFFENDERS WILL BE HELD LIABLE FOR THE PAYMENT OF DAMAGES. ALL RIGHTS RESERVED IN THE EVENT OF THE GRANT OF A PATENT, UTILITY MODEL OR DESIGN.

	DATE	NAME	DOCUMENT NO.	
DFTR.	19.04.2018	RAEDLINGER	SED 5125019 001 02	
CHKD.	25.04.2018	HAUER	CHANGE NO.	SCALE
STAND.	25.04.2018	PRODASTSCHUK	1087395	1:20

WITHOUT CHANGE-OVER SELECTOR	0

WITH CHANGE-OVER SELECTOR (REVERSING / COARSE CHANGE-OVER SELECTOR)	W, G

VRS I 701

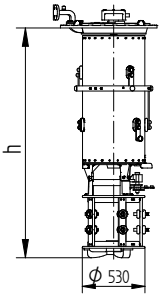

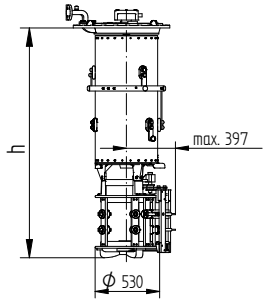

Um [kV]	h [mm] SELECTOR SIZE		
	B	C	D/DE
72,5	1686	1761	1956
123	1816	1891	2086
170	1946	2021	2216
245	2046	2121	2316
300	2198	2273	2468
362	2301	2376	2571
420	2420	2495	2690

VRS I 1001

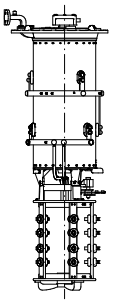

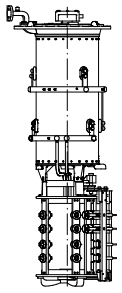

Um [kV]	h [mm] SELECTOR SIZE		
	B	C	D/DE
72,5	1896	1971	2166
123	2026	2101	2296
170	2156	2231	2426
245	2256	2331	2526
300	2408	2483	2678
362	2511	2586	2781
420	2630	2705	2900

VRS I 1301

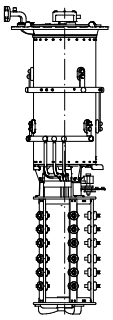

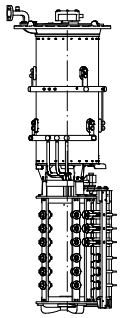

Um [kV]	h [mm] SELECTOR SIZE		
	B	C	D/DE
72,5	2106	2181	2376
123	2236	2311	2506
170	2366	2441	2636
245	2466	2541	2736
300	2618	2693	2888
362	2721	2796	2991
420	2840	2915	3110

VRS II 702

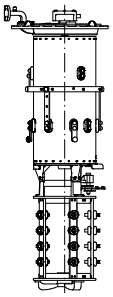

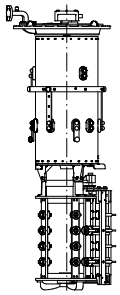

Um [kV]	h [mm] SELECTOR SIZE		
	B	C	D/DE
72,5	1876	2001	2326
123	2006	2131	2456
170	2136	2261	2586
245	2236	2361	2686
300	2388	2513	2838
362	2491	2616	2941

VRS III 700 Y

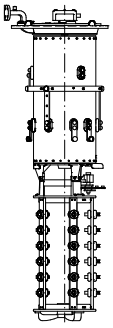

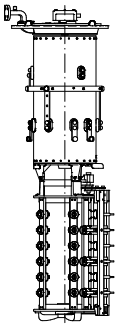

Um [kV]	h [mm] SELECTOR SIZE		
	B	C	D/DE
72,5	2066	2241	2696
123	2196	2371	2826
170	2326	2501	2956
245	2426	2601	3056

SELECTOR SIZE C – 72,5 kV REPRESENTED

DIMENSION IN mm EXCEPT AS NOTED

ON-LOAD TAP-CHANGER VACUTAP® VR
TYPE OVERVIEW VRS – B/C/D/DE

SERIAL NUMBER
–

MATERIAL NUMBER
100176971E

SHEET
1/1

© MASCHINENFABRIK REINHAUSEN GMBH 2018
THE REPRODUCTION, DISTRIBUTION AND UTILIZATION OF THIS DOCUMENT AS WELL AS THE COMMUNICATION OF ITS CONTENTS TO OTHERS WITHOUT EXPRESS AUTHORIZATION IS PROHIBITED. OFFENDERS WILL BE HELD LIABLE FOR THE PAYMENT OF DAMAGES. ALL RIGHTS RESERVED IN THE EVENT OF THE GRANT OF A PATENT, UTILITY MODEL OR DESIGN.

	DATE	NAME	DOCUMENT NO.	
DFTR.	19.04.2018	RAEDLINGER	SED 5125480 001 02	
CHKD.	25.04.2018	HAUER	CHANGE NO.	SCALE
STAND.	25.04.2018	PRODASTSCHUK	1087395	1:20

WITHOUT CHANGE-OVER SELECTOR	0

WITH CHANGE-OVER SELECTOR (REVERSING / COARSE CHANGE-OVER SELECTOR)	W, G

VRM I 701

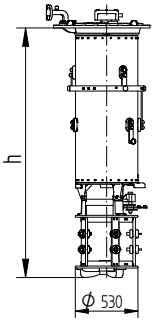

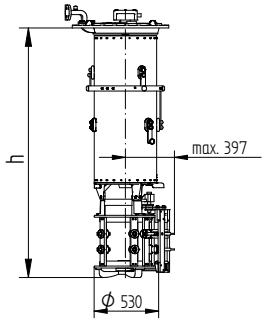

Um [kV]	h [mm] SELECTOR SIZE		
	B	C	D/DE
72,5	1838	1913	2108
123	1968	2043	2238
170	2098	2173	2368
245	2198	2273	2468
300	2350	2425	2620
362	2453	2528	2723
420	2572	2647	2842

VRM I 1001

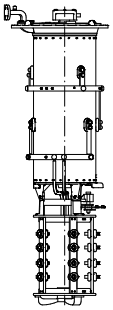

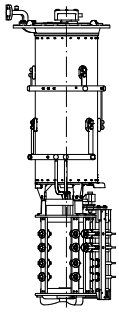

Um [kV]	h [mm] SELECTOR SIZE		
	B	C	D/DE
72,5	2048	2123	2318
123	2178	2253	2448
170	2308	2383	2578
245	2408	2483	2678
300	2560	2635	2830
362	2663	2738	2933
420	2782	2857	3052

VRM I 1301

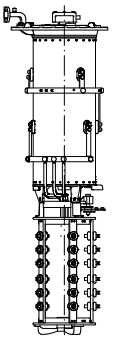

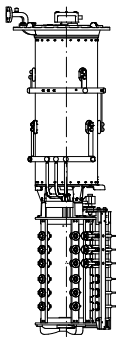

Um [kV]	h [mm] SELECTOR SIZE		
	B	C	D/DE
72,5	2258	2333	2528
123	2388	2463	2658
170	2518	2593	2788
245	2618	2693	2888
300	2770	2845	3040
362	2873	2948	3143
420	2992	3067	3262

VRM II 702

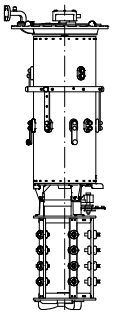

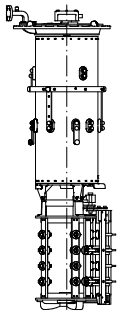

Um [kV]	h [mm] SELECTOR SIZE		
	B	C	D/DE
72,5	2028	2153	2478
123	2158	2283	2608
170	2288	2413	2738
245	2388	2513	2838
300	2540	2665	2990
362	2643	2768	3093

VRM III 700 Y

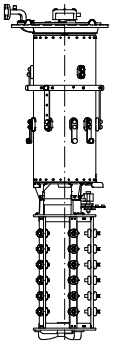

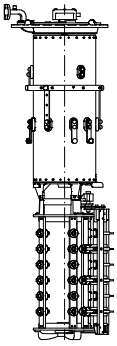

Um [kV]	h [mm] SELECTOR SIZE		
	B	C	D/DE
72,5	2218	2393	2848
123	2348	2523	2978
170	2478	2653	3108
245	2578	2753	3208

SELECTOR SIZE C – 72,5 kV REPRESENTED

DIMENSION IN mm EXCEPT AS NOTED

ON-LOAD TAP-CHANGER VACUTAP® VR
TYPE OVERVIEW VRM – B/C/D/DE

SERIAL NUMBER
–

MATERIAL NUMBER
100176981E

SHEET
1/1

© MASCHINENFABRIK REINHAUSEN GMBH 2017
THE REPRODUCTION, DISTRIBUTION AND UTILIZATION OF THIS DOCUMENT AS WELL AS THE COMMUNICATION OF ITS CONTENTS TO OTHERS WITHOUT EXPRESS AUTHORIZATION IS PROHIBITED. OFFENDERS WILL BE HELD LIABLE FOR THE PAYMENT OF DAMAGES. ALL RIGHTS RESERVED IN THE EVENT OF THE GRANT OF A PATENT, UTILITY MODEL OR DESIGN.

VRS I 701

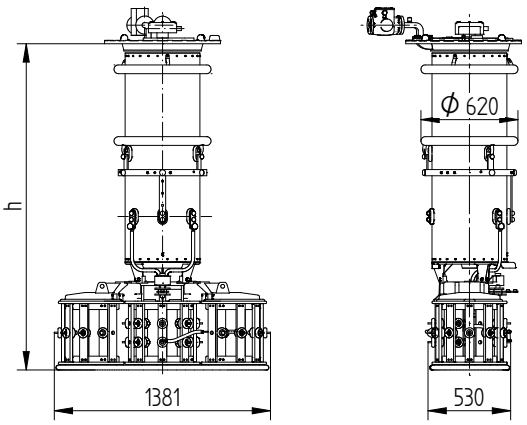

Um [kV]	h [mm]		
	SELECTOR SIZE		
	B	C	D
72,5	1648	1723	1918
123	1778	1853	2048
170	1908	1983	2178
245	2008	2083	2278
300	2160	2235	2430

VRS I 1001

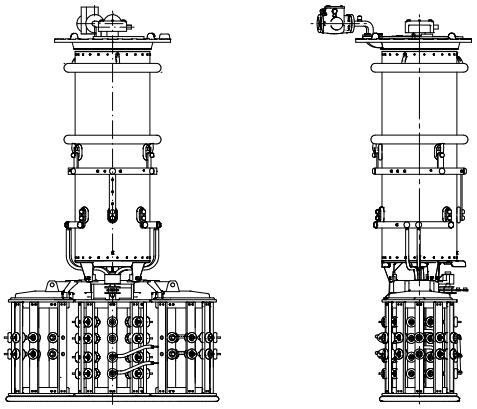

Um [kV]	h [mm]		
	SELECTOR SIZE		
	B	C	D
72,5	1858	1933	2128
123	1988	2063	2258
170	2118	2193	2388
245	2218	2293	2488
300	2370	2445	2640

VRS I 1301

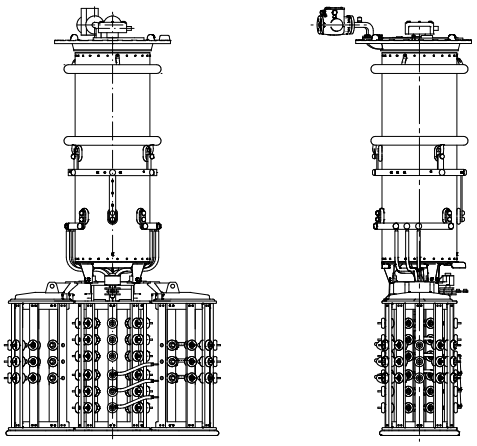

Um [kV]	h [mm]		
	SELECTOR SIZE		
	B	C	D
72,5	2068	2143	2338
123	2198	2273	2468
170	2328	2403	2598
245	2428	2503	2698
300	2580	2655	2850

VRS III 700 Y

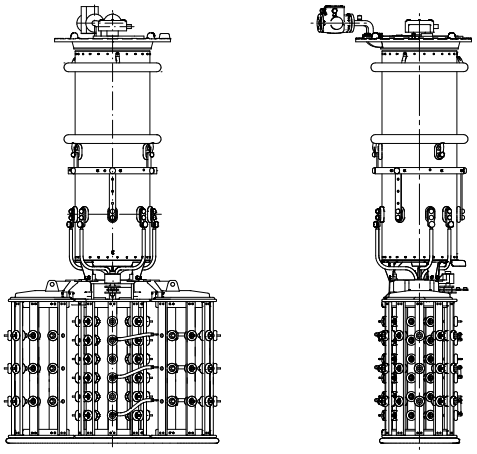

Um [kV]	h [mm]		
	SELECTOR SIZE		
	B	C	D
72,5	2028	2203	2658
123	2158	2333	2788
170	2288	2463	2918
245	2388	2563	3018

	DATE	NAME	DOCUMENT NO.	
DFTR.	13.07.2017	BUTERUS	SED 5552801 001 00	
CHKD.	13.07.2017	WREDE	CHANGE NO.	SCALE
STAND.	14.07.2017	KLEYN	10824427	-

DIMENSION IN mm EXCEPT AS NOTED

ON-LOAD TAP-CHANGER VACUTAP® VR
TYPE OVERVIEW VRS-B/C/D WITH MULTIPLE COARSE CHANGE-OVER SEL
DIMENSION DRAWING

SERIAL NUMBER

MATERIAL NUMBER 100208830E

SHEET 1/1

© MASCHINENFABRIK REINHAUSEN GMBH 2018
THE REPRODUCTION, DISTRIBUTION AND UTILIZATION OF THIS DOCUMENT AS WELL AS THE COMMUNICATION OF ITS CONTENTS TO OTHERS WITHOUT EXPRESS AUTHORIZATION IS PROHIBITED. OFFENDERS WILL BE HELD LIABLE FOR THE PAYMENT OF DAMAGES. ALL RIGHTS RESERVED IN THE EVENT OF THE GRANT OF A PATENT, UTILITY MODEL OR DESIGN.

VRM I 701

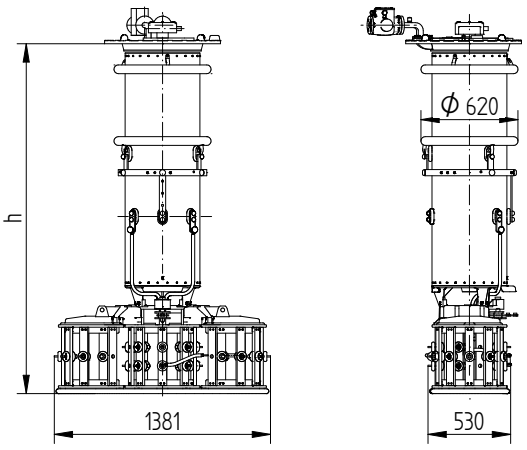

Um [kV]	h [mm]		
	SELECTOR SIZE		
	B	C	D
72,5	1800	1875	2070
123	1930	2005	2200
170	2060	2135	2330
245	2160	2235	2430
300	2312	2387	2582

VRM I 1001

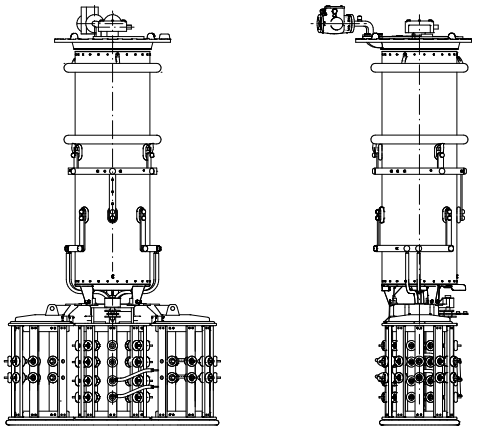

Um [kV]	h [mm]		
	SELECTOR SIZE		
	B	C	D
72,5	2010	2085	2280
123	2140	2215	2410
170	2270	2345	2540
245	2370	2445	2640
300	2522	2597	2792

VRM I 1301

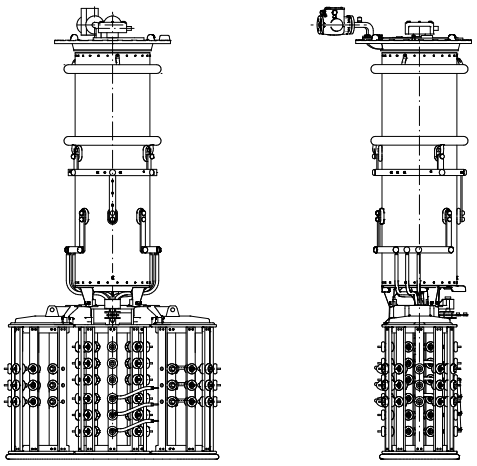

Um [kV]	h [mm]		
	SELECTOR SIZE		
	B	C	D
72,5	2220	2295	2490
123	2350	2425	2620
170	2480	2555	2750
245	2580	2655	2850
300	2732	2807	3002

VRM III 700 Y

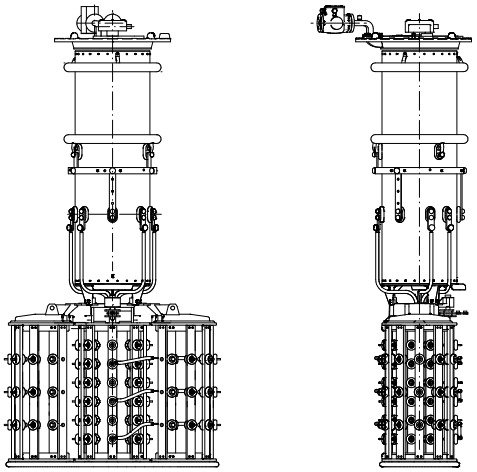

Um [kV]	h [mm]		
	SELECTOR SIZE		
	B	C	D
72,5	2180	2355	2810
123	2310	2485	2940
170	2440	2615	3070
245	2540	2715	3170

SELECTOR SIZE C – 245 kV REPRESENTED

	DATE	NAME	DOCUMENT NO.	
DFTR.	19.04.2018	RAEDLINGER	SED 6015835 001 00	
CHKD.	25.04.2018	HAUER	CHANGE NO.	SCALE
STAND.	25.04.2018	PRODASTSCHUK	1087395	-

DIMENSION IN mm EXCEPT AS NOTED

ON-LOAD TAP-CHANGER VACUTAP® VR
VRM – B/C/D WITH MULTIPLE COARSE CHANGE-OVER SELECTOR
TYPE OVERVIEW

SERIAL NUMBER

MATERIAL NUMBER 101170700E

SHEET 1/1

MASCHINENFABRIK REINHAUSEN GMBH COPYRIGHT RESERVED
THE REPRODUCTION, DISTRIBUTION AND UTILIZATION OF THIS DOCUMENT AS WELL AS THE COMMUNICATION OF ITS CONTENTS TO OTHERS WITHOUT EXPRESS AUTHORIZATION IS PROHIBITED. OFFENDERS WILL BE HELD LIABLE FOR THE PAYMENT OF DAMAGES. ALL RIGHTS RESERVED IN THE EVENT OF THE GRANT OF A PATENT, UTILITY MODEL OR DESIGN.

	DATE	NAME	DOCUMENT NO.	
DFTR.	26.07.2022	BUTERUS	SED 8915332 001 00	
CHKD.	27.07.2022	WREDE	CHANGE NO.	SCALE
STAND.	27.07.2022	KLEYN	1116192	1:20

WITH CHANGE-OVER SELECTOR (REVERSING / COARSE CHANGE-OVER SELECTOR)	W, G

VRL III 1600 E

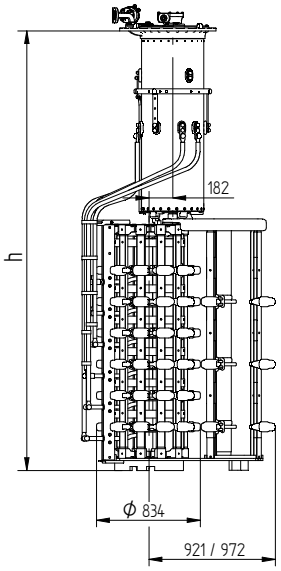

Um [kV]	h [mm]
72,5	3372
123	3502
170	3632
245	3732

72,5 kV DISPLAYED

DIMENSION IN mm EXCEPT AS NOTED

ON-LOAD TAP-CHANGER VACUTAP® VR®
TYPE OVERVIEW VRL III 1600 E
DIMENSION DRAWING

SERIAL NUMBER

MATERIAL NUMBER 101715770E

SHEET 1/1

© MASCHINENFABRIK REINHAUSEN GMBH 2020
THE REPRODUCTION, DISTRIBUTION AND UTILIZATION OF THIS DOCUMENT AS WELL AS THE COMMUNICATION OF ITS CONTENTS TO OTHERS WITHOUT EXPRESS AUTHORIZATION IS PROHIBITED. OFFENDERS WILL BE HELD LIABLE FOR THE PAYMENT OF DAMAGES. ALL RIGHTS RESERVED IN THE EVENT OF THE GRANT OF A PATENT, UTILITY MODEL OR DESIGN.

WITHOUT CHANGE-OVER SELECTOR	0

WITH CHANGE-OVER SELECTOR (REVERSING / COARSE CHANGE-OVER SELECTOR)	W, G

VRL I 1801
VRL I 2001
VRL I 2401

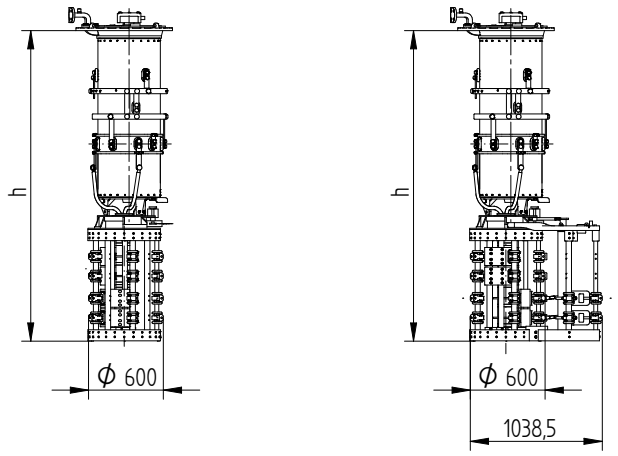

Um [kV]	h [mm]	
	SELECTOR SIZE	
	RC	RD / RDE
72,5	2381	2461
123	2511	2591
170	2641	2721
245	2741	2821
300	2893	2973
362	2996	3076
420	3115	3195

SELECTOR SIZE RC 72,5kV DISPLAYED

VRL I 1801
VRL I 2001
VRL I 2401

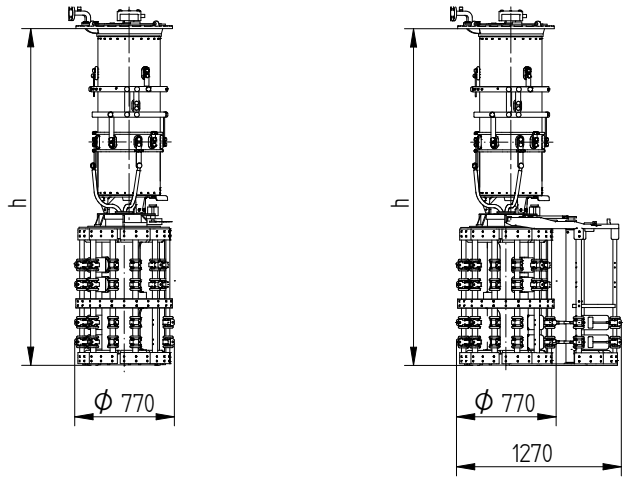

Um [kV]	h [mm]
	SELECTOR SIZE
	RE
72,5	2582
123	2712
170	2842
245	2942
300	3094
362	3197
420	3316

SELECTOR SIZE RE 72,5kV DISPLAYED

	DATE	NAME	DOCUMENT NO.	
DFTR.	-	-	SED 8367967 001 01	
CHKD.	08.11.2021	WREDE	CHANGE NO.	SCALE
STAND.	-	-	1111654	1:20

DIMENSION IN mm EXCEPT AS NOTED

ON-LOAD TAP-CHANGER VACUTAP® VR®
VRL I 1801/2001/2401 – SELECTOR SIZE RC/RD/RDE/RE
TYPE OVERVIEW

SERIAL NUMBER

MATERIAL NUMBER 101624790E

SHEET 1/1

WITHOUT CHANGE-OVER SELECTOR	0

WITH CHANGE-OVER SELECTOR (REVERSING / COARSE CHANGE-OVER SELECTOR)	W, G

VRL I 2601
VRL I 3001
VRL I 3201

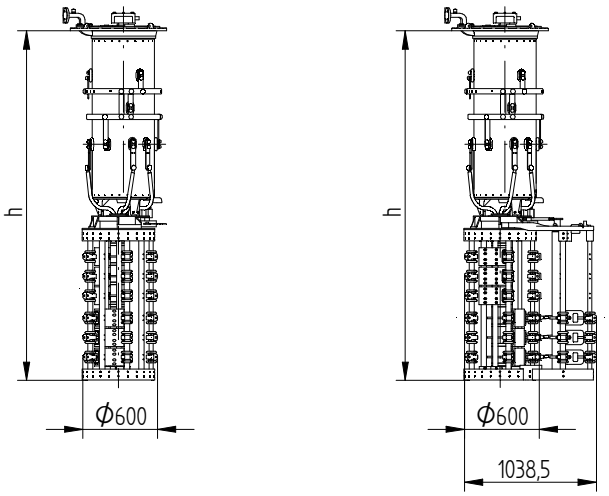

Um [kV]	h [mm]	
	SELECTOR SIZE	
	RC	RD / RDE
72,5	2681	2761
123	2811	2891
170	2941	3021
245	3041	3121
300	3193	3273
362	3296	3376
420	3415	3495

SELECTOR SIZE RC 72,5kV DISPLAYED

VRL I 2601
VRL I 3001
VRL I 3201

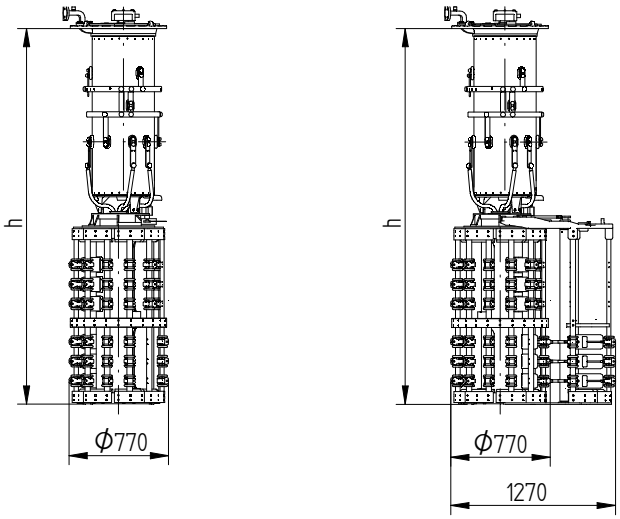

Um [kV]	h [mm]
	SELECTOR SIZE
	RE
72,5	2882
123	3012
170	3142
245	3242
300	3394
362	3497
420	3616

SELECTOR SIZE RE 72,5kV DISPLAYED

© MASCHINENFABRIK REINHAUSEN GMBH 2020
THE REPRODUCTION, DISTRIBUTION AND UTILIZATION OF THIS DOCUMENT AS WELL AS THE COMMUNICATION OF ITS CONTENTS TO OTHERS WITHOUT EXPRESS AUTHORIZATION IS PROHIBITED. OFFENDERS WILL BE HELD LIABLE FOR THE PAYMENT OF DAMAGES. ALL RIGHTS RESERVED IN THE EVENT OF THE GRANT OF A PATENT, UTILITY MODEL OR DESIGN.

	DATE	NAME	DOCUMENT NO.	
DFTR.	05.11.2021	BUTERUS	SED 8367952 001 00	
CHKD.	08.11.2021	WREDE	CHANGE NO.	SCALE
STAND.	09.11.2021	KLEYN	1109989	1:20

DIMENSION IN mm EXCEPT AS NOTED

ON-LOAD TAP-CHANGER VACUTAP® VR®
VRL I 2601/3001/3201 – SELECTOR SIZE RC/RD/RDE/RE
TYPE OVERVIEW

SERIAL NUMBER

MATERIAL NUMBER 101624760E

SHEET 1/1

4.2 寸法図

© MASCHINENFABRIK REINHAUSEN GMBH 2018
THE REPRODUCTION, DISTRIBUTION AND UTILIZATION OF THIS DOCUMENT AS WELL AS THE COMMUNICATION OF ITS CONTENTS TO OTHERS WITHOUT EXPRESS AUTHORIZATION IS PROHIBITED. OFFENDERS WILL BE HELD LIABLE FOR THE PAYMENT OF DAMAGES. ALL RIGHTS RESERVED IN THE EVENT OF THE GRANT OF A PATENT, UTILITY MODEL OR DESIGN.

	WITHOUT CHANGE-OVER SELECTOR	0

	WITH CHANGE-OVER SELECTOR (REVERSING / COARSE CHANGE-OVER SELECTOR)	W, G

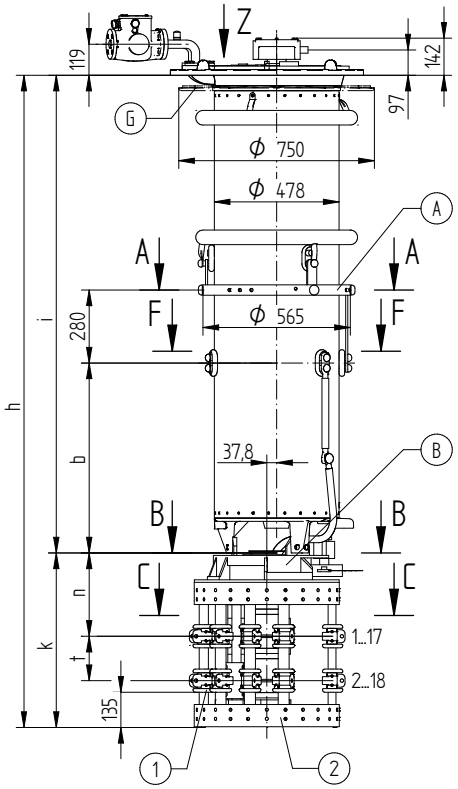

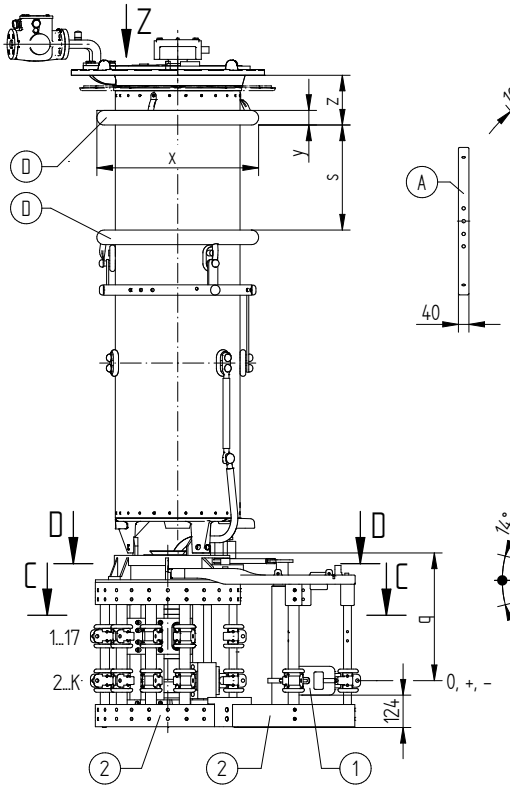

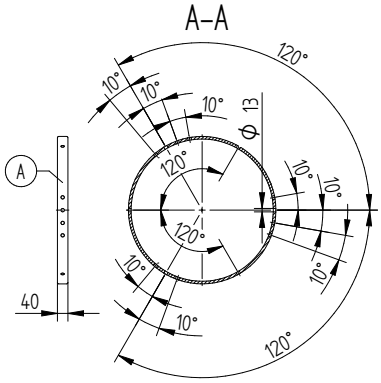

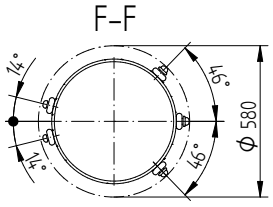

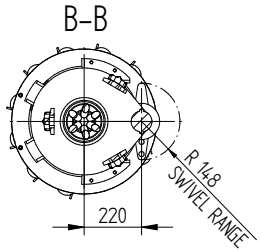

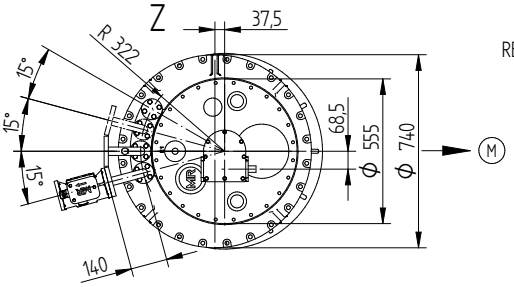

D–D
REVERSING CHANGE-OVER SELECTOR (1W)

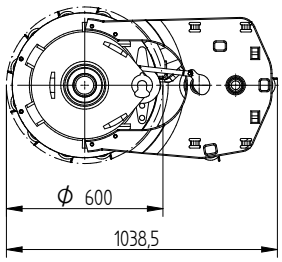

D–D
COARSE CHANGE-OVER SELECTOR (1G)

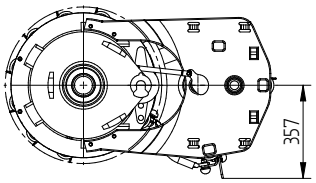

FOR THE TYPE OF OLTC-HEAD REFER TO THE ORDER-SPECIFIC DRAWING OF THE OLTC-HEAD AND DRIVE SHAFTS

(M) – DRIVE SIDE OF SELECTOR
(A) – ON-LOAD TAP-CHANGER CURRENT TAKE-OFF TERMINAL
(B) – IS CONNECTED TO POTENTIAL OF (A)
(D) – SHIELDING RINGS FOR UM OF 170 kV OR GREATER
(G) – SUPPORTING FLANGE FOR THE BELL-TYPE TANK INSTALLATION IS OPTIONAL
(1) – BOTTOM-MOST LIVE PARTS; THESE ARE CONNECTED TO THE POTENTIAL OF THE ASSOCIATED AND/OR WIRED CONNECTION CONTACT
(2) – SELECTOR BASE IS MADE OF INSULATING MATERIAL

– THE DETAILED CONNECTION DIAGRAM IS BINDING FOR THE DESIGNATION OF THE CONNECTION CONTACTS AND PHASES
– C-C: REFER TO 10009030
– D-D: TYPE WITH CONNECTING LEAD 3W/3G REFER TO 10010019

	DATE	NAME	DOCUMENT NO.	
DFTR.	18.01.2018	RAEDLINGER	SED 51422887 001 01	
CHKD.	23.01.2018	MENZELS	CHANGE NO.	SCALE
STAND.	23.01.2018	PRODASTSCHUK	1085481	1:10

DIMENSION IN mm EXCEPT AS NOTED

ON-LOAD TAP-CHANGER VACUTAP® VR
VR S/M/L/H I 651/701/1001/1301 – 72,5...420 kV – RC/RD/RDE
DIMENSION DRAWING

SERIAL NUMBER

MATERIAL NUMBER 100178561E

SHEET 1/2

VACUTAP® VRS

SELECTOR SIZE		RC							RD / RDE						
Um [kV]		72,5	123	170	245	300	362	420	72,5	123	170	245	300	362	420
DIMENSIONS [mm]	h	1837	1967	2097	2197	2349	2452	2571	1917	2047	2177	2277	2429	2532	2651
	i	1168	1298	1428	1528	1680	1783	1902	1168	1298	1428	1528	1680	1783	1902
	b	425							425						
	s	–	–	302	402	554	573	692	–	–	302	402	554	573	692
	z	–	–	191	191	191	228	228	–	–	191	191	191	228	228
	x	–	–	Ø 620	Ø 620	Ø 620	Ø 695	Ø 695	–	–	Ø 620	Ø 620	Ø 620	Ø 695	Ø 695
	y	–	–	Ø 56	Ø 56	Ø 56	Ø 100	Ø 100	–	–	Ø 56	Ø 56	Ø 56	Ø 100	Ø 100
	k	669							749						
	n	319							359						
	t	170							210						
	q	489							569						
OIL VOLUME [dm³]		160	180	200	220	240	260	280	160	180	200	220	240	260	280
DISPLACEMENT [dm³]		249	269	299	319	349	389	409	250	270	300	320	350	390	410
MAX. WEIGHT [kg]		358	364	377	380	386	393	398	363	369	382	385	391	398	403

VACUTAP® VRM / VRH 651

SELECTOR SIZE		RC							RD / RDE						
Um [kV]		72,5	123	170	245	300	362	420	72,5	123	170	245	300	362	420
DIMENSIONS [mm]	h	1988	2118	2248	2348	2500	2603	2722	2068	2198	2328	2428	2580	2683	2802
	i	1319	1449	1579	1679	1831	1934	2053	1319	1449	1579	1679	1831	1934	2053
	b	576							576						
	s	–	–	302	402	554	573	692	–	–	302	402	554	573	692
	z	–	–	191	191	191	228	228	–	–	191	191	191	228	228
	x	–	–	Ø 620	Ø 620	Ø 620	Ø 695	Ø 695	–	–	Ø 620	Ø 620	Ø 620	Ø 695	Ø 695
	y	–	–	Ø 56	Ø 56	Ø 56	Ø 100	Ø 100	–	–	Ø 56	Ø 56	Ø 56	Ø 100	Ø 100
	k	669							749						
	n	319							359						
	t	170							210						
	q	489							569						
OIL VOLUME [dm³]		180	200	230	245	270	285	305	180	200	230	245	270	285	305
DISPLACEMENT [dm³]		269	299	329	349	379	419	439	270	300	330	350	380	420	440
MAX. WEIGHT [kg]		367	373	386	390	395	402	407	372	378	391	395	400	407	412

VACUTAP® VRL / VRH 1301

SELECTOR SIZE		RC							RD / RDE						
Um [kV]		72,5	123	170	245	300	362	420	72,5	123	170	245	300	362	420
DIMENSIONS [mm]	h	2140	2270	2400	2500	2652	2755	2874	2220	2350	2480	2580	2732	2835	2954
	i	1471	1601	1731	1831	1983	2086	2205	1471	1601	1731	1831	1983	2086	2205
	b	728							728						
	s	–	–	302	402	554	573	692	–	–	302	402	554	573	692
	z	–	–	191	191	191	228	228	–	–	191	191	191	228	228
	x	–	–	Ø 620	Ø 620	Ø 620	Ø 695	Ø 695	–	–	Ø 620	Ø 620	Ø 620	Ø 695	Ø 695
	y	–	–	Ø 56	Ø 56	Ø 56	Ø 100	Ø 100	–	–	Ø 56	Ø 56	Ø 56	Ø 100	Ø 100
	k	669							749						
	n	319							359						
	t	170							210						
	q	489							569						
OIL VOLUME [dm³]		210	230	250	270	290	310	330	210	230	250	270	290	310	330
DISPLACEMENT [dm³]		299	329	359	379	409	449	469	300	330	360	380	410	450	470
MAX. WEIGHT [kg]		377	383	395	399	405	412	416	382	388	400	404	410	417	421

© MASCHINENFABRIK REINHAUSEN GMBH 2018
THE REPRODUCTION, DISTRIBUTION AND UTILIZATION OF THIS DOCUMENT AS WELL AS THE COMMUNICATION OF ITS CONTENTS TO OTHERS WITHOUT EXPRESS AUTHORIZATION IS PROHIBITED. OFFENDERS WILL BE HELD LIABLE FOR THE PAYMENT OF DAMAGES. ALL RIGHTS RESERVED IN THE EVENT OF THE GRANT OF A PATENT, UTILITY MODEL OR DESIGN.

	DATE	NAME	DOCUMENT NO.	
DFTR.	18.01.2018	RAEDLINGER	SED 51423887 001 01	
CHKD.	23.01.2018	MENZELS	CHANGE NO.	SCALE 1:10
STAND.	23.01.2018	PRODASTSCHUK	1085481	

DIMENSION IN mm EXCEPT AS NOTED

ON-LOAD TAP-CHANGER VACUTAP® VR
VR S/M/L/H I 651/701/1001/1301 – 72,5...420 kV – RC/RD/RDE
DIMENSION DRAWING

SERIAL NUMBER

MATERIAL NUMBER 100178561E

SHEET 2/2

© MASCHINENFABRIK REINHAUSEN GMBH 2016
THE REPRODUCTION, DISTRIBUTION AND UTILIZATION OF THIS DOCUMENT AS WELL AS THE COMMUNICATION OF ITS CONTENTS TO OTHERS WITHOUT EXPRESS AUTHORIZATION IS PROHIBITED. OFFENDERS WILL BE HELD LIABLE FOR THE PAYMENT OF DAMAGES. ALL RIGHTS RESERVED IN THE EVENT OF THE GRANT OF A PATENT, UTILITY MODEL OR DESIGN.

WITHOUT CHANGE-OVER SELECTOR	0

WITH CHANGE-OVER SELECTOR (REVERSING / COARSE CHANGE-OVER SELECTOR)	W, G

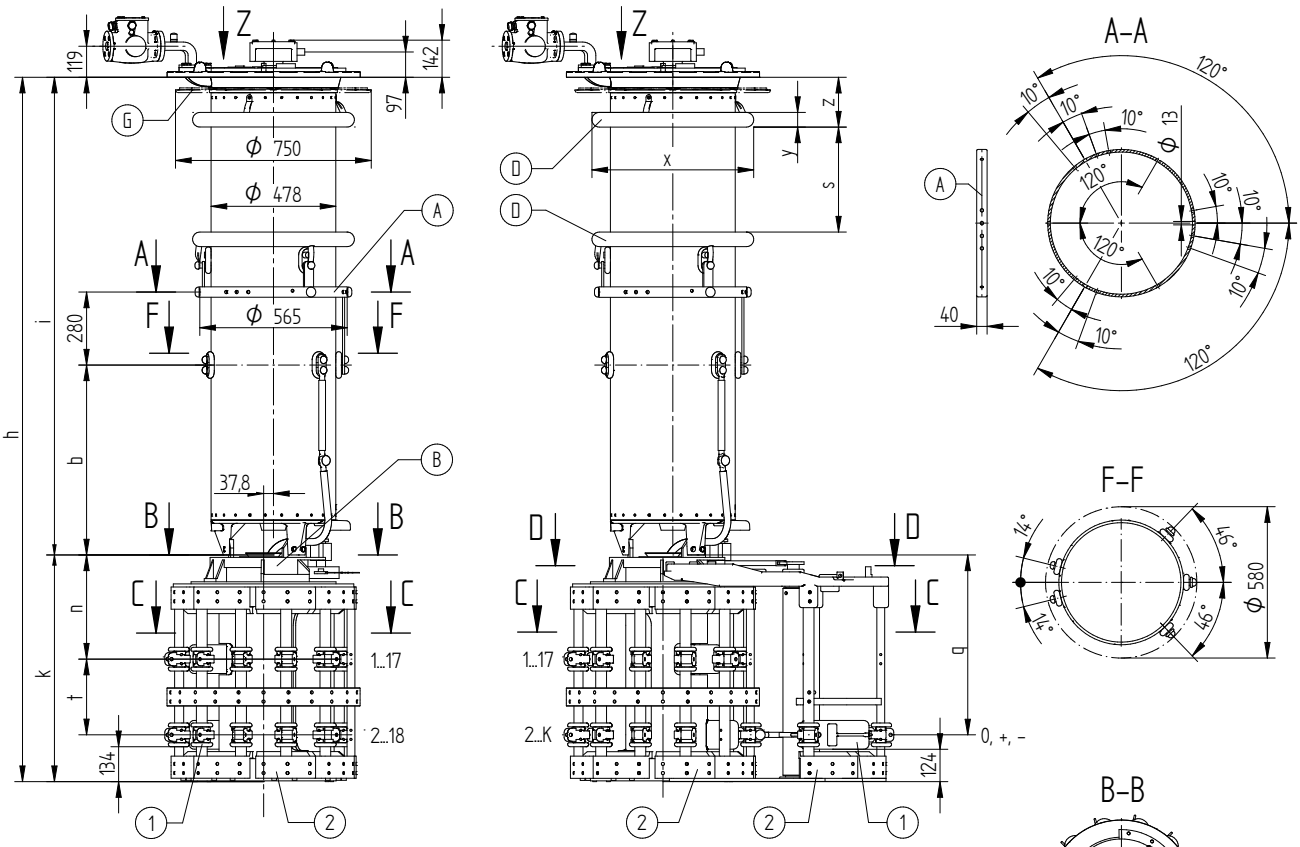

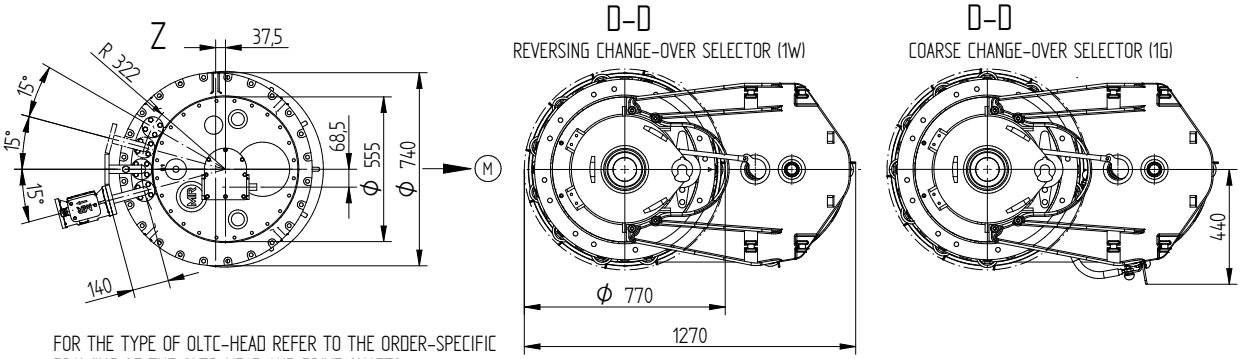

FOR THE TYPE OF OLTC-HEAD REFER TO THE ORDER-SPECIFIC DRAWING OF THE OLTC-HEAD AND DRIVE SHAFTS

(M) – DRIVE SIDE OF SELECTOR
(A) – ON-LOAD TAP-CHANGER CURRENT TAKE-OFF TERMINAL
(B) – IS CONNECTED TO POTENTIAL OF (A)
(D) – SHIELDING RINGS FOR UM OF 170 kV OR GREATER
(G) – SUPPORTING FLANGE FOR THE BELL-TYPE TANK INSTALLATION IS OPTIONAL
(1) – BOTTOM-MOST LIVE PARTS; THESE ARE CONNECTED TO THE POTENTIAL OF THE ASSOCIATED AND/OR WIRED CONNECTION CONTACT
(2) – SELECTOR BASE IS MADE OF INSULATING MATERIAL

– THE DETAILED CONNECTION DIAGRAM IS BINDING FOR THE DESIGNATION OF THE CONNECTION CONTACTS AND PHASES
– C–C: REFER TO 10016570
– D–D: TYPE WITH CONNECTING LEAD 3W/3G REFER TO 10017264

	DATE	NAME	DOCUMENT NO.	
DFTR.	24.10.2016	BUTERUS	SED 5143008 001 00	
CHKD.	26.10.2016	WREDE	CHANGE NO.	SCALE
STAND.	26.10.2016	PRODASTSCHUK	1077332	-

DIMENSION IN mm EXCEPT AS NOTED

ON-LOAD TAP-CHANGER VACUTAP® VR
VR S/M/L/H I 651/701/1001/1301 – 72,5...420 kV – RE
DIMENSION DRAWING

SERIAL NUMBER –
MATERIAL NUMBER 100178570E
SHEET 1/2

VACUTAP® VRS

SELECTOR SIZE		RE						
Um [kV]		72,5	123	170	245	300	362	420
DIMENSIONS [mm]	h	2038	2168	2298	2398	2550	2653	2772
	i	1168	1298	1428	1528	1680	1783	1902
	b	425						
	s	–	–	302	402	554	573	692
	z	–	–	191	191	191	228	228
	x	–	–	Φ 620	Φ 620	Φ 620	Φ 695	Φ 695
	y	–	–	Φ 56	Φ 56	Φ 56	Φ100	Φ100
	k	870						
	n	400						
	t	290						
	q	690						
OIL CONTENT [dm³]		160	180	200	220	240	260	280
DISPLACEMENT [dm³]		280	300	330	350	380	420	440
MAX. WEIGHT [kg]		419	425	438	441	447	454	459

VACUTAP® VRM / VRH 651

SELECTOR SIZE		RE						
Um [kV]		72,5	123	170	245	300	362	420
DIMENSIONS [mm]	h	2190	2320	2450	2550	2702	2805	2924
	i	1320	1450	1580	1680	1832	1935	2054
	b	576						
	s	–	–	302	402	554	573	692
	z	–	–	191	191	191	228	228
	x	–	–	Φ 620	Φ 620	Φ 620	Φ 695	Φ 695
	y	–	–	Φ 56	Φ 56	Φ 56	Φ100	Φ100
	k	870						
	n	400						
	t	290						
	q	690						
OIL CONTENT [dm³]		180	200	230	245	270	285	305
DISPLACEMENT [dm³]		300	330	360	380	410	450	470
MAX. WEIGHT [kg]		428	434	447	451	456	463	468

VACUTAP® VRL / VRH 1301

SELECTOR SIZE		RE						
Um [kV]		72,5	123	170	245	300	362	420
DIMENSIONS [mm]	h	2341	2471	2601	2701	2853	2956	3075
	i	1471	1601	1731	1831	1983	2086	2205
	b	728						
	s	–	–	302	402	554	573	692
	z	–	–	191	191	191	228	228
	x	–	–	Φ 620	Φ 620	Φ 620	Φ 695	Φ 695
	y	–	–	Φ 56	Φ 56	Φ 56	Φ100	Φ100
	k	870						
	n	400						
	t	290						
	q	690						
OIL CONTENT [dm³]		210	230	250	270	290	310	330
DISPLACEMENT [dm³]		330	360	390	410	440	480	500
MAX. WEIGHT [kg]		438	444	456	460	466	473	477

© MASCHINENFABRIK REINHAUSEN GMBH 2016
THE REPRODUCTION, DISTRIBUTION AND UTILIZATION OF THIS DOCUMENT AS WELL AS THE COMMUNICATION OF ITS CONTENTS TO OTHERS WITHOUT EXPRESS AUTHORIZATION IS PROHIBITED. OFFENDERS WILL BE HELD LIABLE FOR THE PAYMENT OF DAMAGES. ALL RIGHTS RESERVED IN THE EVENT OF THE GRANT OF A PATENT, UTILITY MODEL OR DESIGN.

	DATE	NAME	DOCUMENT NO.	
DFTR.	24.10.2016	BUTERUS	SED 5143008 001 00	
CHKD.	26.10.2016	WREDE	CHANGE NO.	SCALE
STAND.	26.10.2016	PRODASTSCHUK	1077332	-

DIMENSION IN mm EXCEPT AS NOTED

MR

ON-LOAD TAP-CHANGER VACUTAP® VR
VR S/M/L/H I 651/701/1001/1301 – 72,5...420 kV – RE
DIMENSION DRAWING

SERIAL NUMBER
–

MATERIAL NUMBER
100178570E

SHEET
2/2

MASCHINENFABRIK REINHAUSEN GMBH COPYRIGHT RESERVED
THE REPRODUCTION, DISTRIBUTION AND UTILIZATION OF THIS DOCUMENT AS WELL AS THE COMMUNICATION OF ITS CONTENTS TO OTHERS WITHOUT EXPRESS AUTHORIZATION IS PROHIBITED. OFFENDERS WILL BE HELD LIABLE FOR THE PAYMENT OF DAMAGES. ALL RIGHTS RESERVED IN THE EVENT OF THE GRANT OF A PATENT, UTILITY MODEL OR DESIGN.

	WITHOUT CHANGE-OVER SELECTOR	0

	WITH CHANGE-OVER SELECTOR (REVERSING / COARSE CHANGE-OVER SELECTOR)	W, G

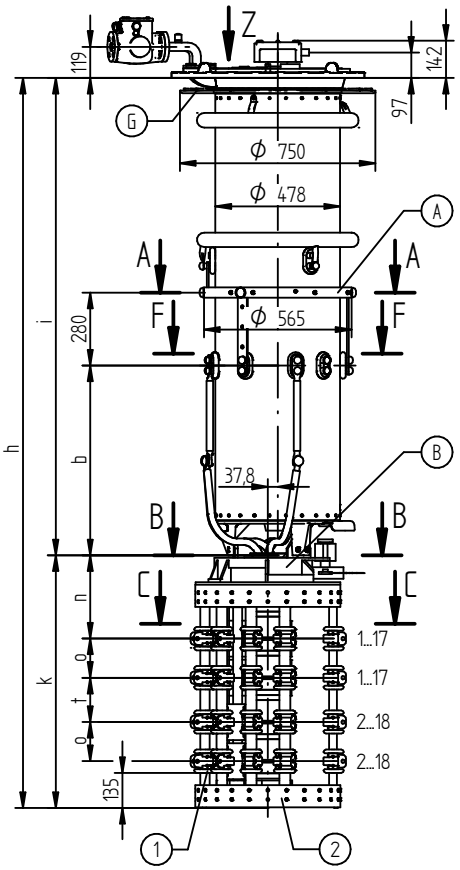

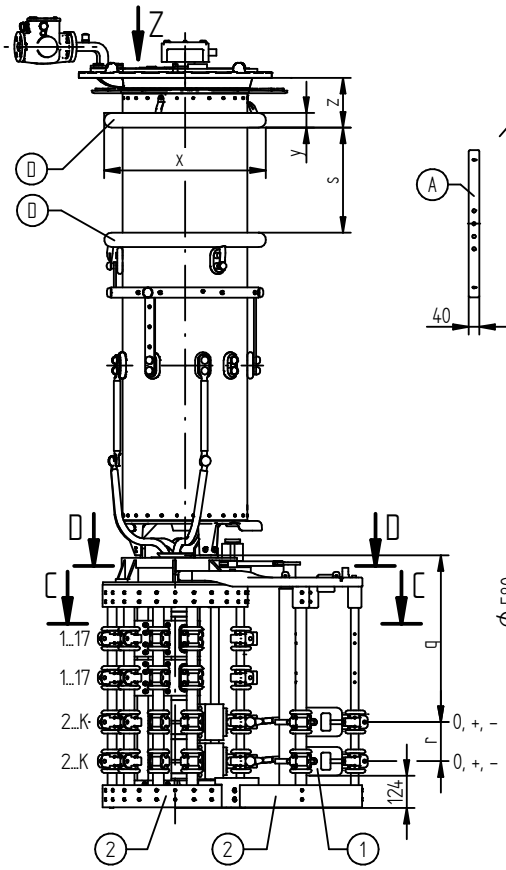

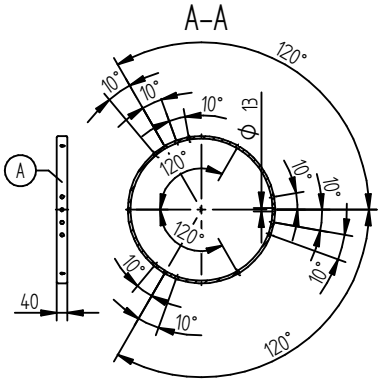

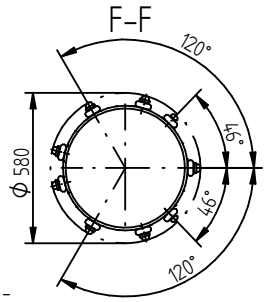

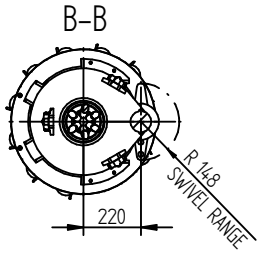

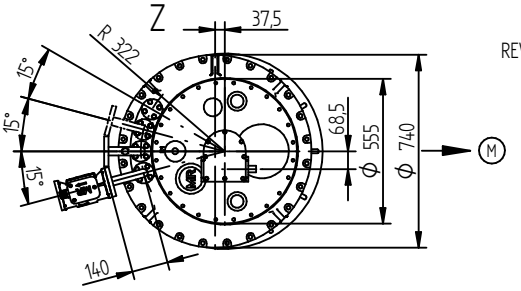

D–D

REVERSING CHANGE-OVER SELECTOR (1W)

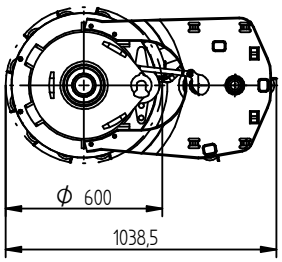

D–D

COARSE CHANGE-OVER SELECTOR (1G)

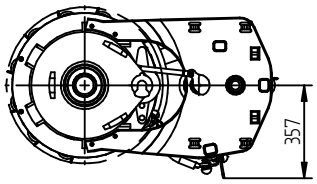

FOR THE TYPE OF OLTC-HEAD REFER TO THE ORDER-SPECIFIC DRAWING OF THE OLTC-HEAD AND DRIVE SHAFTS

(M) – DRIVE SIDE OF SELECTOR
(A) – ON-LOAD TAP-CHANGER CURRENT TAKE-OFF TERMINAL
(B) – IS CONNECTED TO POTENTIAL OF (A)
(D) – SHIELDING RINGS FOR UM OF 170 kV OR GREATER
(G) – SUPPORTING FLANGE FOR THE BELL-TYPE TANK INSTALLATION IS OPTIONAL
(1) – BOTTOM-MOST LIVE PARTS; THESE ARE CONNECTED TO THE POTENTIAL OF THE ASSOCIATED AND/OR WIRED CONNECTION CONTACT
(2) – SELECTOR BASE IS MADE OF INSULATING MATERIAL

– THE DETAILED CONNECTION DIAGRAM IS BINDING FOR THE DESIGNATION OF THE CONNECTION CONTACTS AND PHASES
– C–C: REFER TO 10009030
– D–D: TYPE WITH CONNECTING LEAD 3W/3G REFER TO 10010019

	DATE	NAME	DOCUMENT NO.	
DFTR.	07.05.2021	RAEDLINGER	SED 5144508 001 02	
EHKO.	21.05.2021	HAUER	CHANGE NO.	SCALE
STAND	21.05.2021	WANNINGER	1106874	1:10

DIMENSION IN mm EXCEPT AS NOTED

ON-LOAD TAP-CHANGER VACUTAP® VR®
VRS/M/L/H I 2622-72,5...420-RC/RD/RDE-WITH FORCED CURRENT SPLITTING
DIMENSION DRAWING

SERIAL NUMBER

MATERIAL NUMBER 100178622E

SHEET 1/2

MASCHINENFABRIK REINHAUSEN GMBH COPYRIGHT RESERVED
THE REPRODUCTION, DISTRIBUTION AND UTILIZATION OF THIS DOCUMENT AS WELL AS THE COMMUNICATION OF ITS CONTENTS TO OTHERS WITHOUT EXPRESS AUTHORIZATION IS PROHIBITED. OFFENDERS WILL BE HELD LIABLE FOR THE PAYMENT OF DAMAGES. ALL RIGHTS RESERVED IN THE EVENT OF THE GRANT OF A PATENT, UTILITY MODEL OR DESIGN.

VACUTAP® VRS

SELECTOR SIZE		RC							RD / RDE						
Um [kV]		72,5	123	170	245	300	362	420	72,5	123	170	245	300	362	420
DIMENSIONS [mm]	h	2137	2267	2397	2497	2649	2752	2871	2217	2347	2477	2577	2729	2832	2951
	i	1168	1298	1428	1528	1680	1783	1902	1168	1298	1428	1528	1680	1783	1902
	b	425							425						
	s	–	–	302	402	554	573	692	–	–	302	402	554	573	692
	z	–	–	191	191	191	228	228	–	–	191	191	191	228	228
	x	–	–	Φ 620	Φ 620	Φ 620	Φ 695	Φ 695	–	–	Φ 620	Φ 620	Φ 620	Φ 695	Φ 695
	y	–	–	Φ 56	Φ 56	Φ 56	Φ100	Φ100	–	–	Φ 56	Φ 56	Φ 56	Φ100	Φ100
	k	969							1049						
	n	319							359						
	o	150							150						
	t	170							210						
	r	150							150						
	q	639							719						
OIL VOLUME [dm³]		155	175	195	215	235	255	275	155	175	195	215	235	255	275
DISPLACEMENT [dm³]		263	283	313	333	363	403	423	265	285	315	335	365	405	425
MAX. WEIGHT [kg]		450	456	469	472	478	485	490	455	461	474	477	483	490	495

VACUTAP® VRM

SELECTOR SIZE		RC							RD / RDE						
Um [kV]		72,5	123	170	245	300	362	420	72,5	123	170	245	300	362	420
DIMENSIONS [mm]	h	2288	2418	2548	2648	2800	2903	3022	2368	2498	2628	2728	2880	2983	3102
	i	1319	1449	1579	1679	1831	1934	2053	1319	1449	1579	1679	1831	1934	2053
	b	576							576						
	s	–	–	302	402	554	573	692	–	–	302	402	554	573	692
	z	–	–	191	191	191	228	228	–	–	191	191	191	228	228
	x	–	–	Φ 620	Φ 620	Φ 620	Φ 695	Φ 695	–	–	Φ 620	Φ 620	Φ 620	Φ 695	Φ 695
	y	–	–	Φ 56	Φ 56	Φ 56	Φ100	Φ100	–	–	Φ 56	Φ 56	Φ 56	Φ100	Φ100
	k	969							1049						
	n	319							359						
	o	150							150						
	t	170							210						
	r	150							150						
	q	639							719						
OIL VOLUME [dm³]		175	195	225	240	265	280	300	175	195	225	240	265	280	300
DISPLACEMENT [dm³]		283	313	343	363	393	433	453	285	315	345	365	395	435	455
MAX. WEIGHT [kg]		466	472	484	488	494	500	505	471	477	489	493	499	505	510

VACUTAP® VRL / VRH

SELECTOR SIZE		RC							RD / RDE						
Um [kV]		72,5	123	170	245	300	362	420	72,5	123	170	245	300	362	420
DIMENSIONS [mm]	h	2440	2570	2700	2800	2952	3055	3174	2520	2650	2780	2880	3032	3135	3254
	i	1471	1601	1731	1831	1983	2086	2205	1471	1601	1731	1831	1983	2086	2205
	b	728							728						
	s	–	–	302	402	554	573	692	–	–	302	402	554	573	692
	z	–	–	191	191	191	228	228	–	–	191	191	191	228	228
	x	–	–	Φ 620	Φ 620	Φ 620	Φ 695	Φ 695	–	–	Φ 620	Φ 620	Φ 620	Φ 695	Φ 695
	y	–	–	Φ 56	Φ 56	Φ 56	Φ100	Φ100	–	–	Φ 56	Φ 56	Φ 56	Φ100	Φ100
	k	969							1049						
	n	319							359						
	o	150							150						
	t	170							210						
	r	150							150						
	q	639							719						
OIL VOLUME [dm³]		205	225	245	265	285	305	325	205	225	245	265	285	305	325
DISPLACEMENT [dm³]		313	343	373	393	423	463	483	315	345	375	395	425	465	485
MAX. WEIGHT [kg]		479	485	497	501	507	514	519	484	490	502	506	512	519	524

	DATE	NAME	DOCUMENT NO.	
DFTR.	07.05.2021	RAEDLINGER	SED 5144508 001 02	
EHKO.	21.05.2021	HAUER	CHANGE NO.	SCALE 1:10
STAND.	21.05.2021	WANNINGER	1106874	

DIMENSION IN mm EXCEPT AS NOTED

ON-LOAD TAP-CHANGER VACUTAP® VR®
VRS/M/L/H I 2622-72,5...420-RC/RD/RDE-WITH FORCED CURRENT SPLITTING
DIMENSION DRAWING

SERIAL NUMBER

MATERIAL NUMBER 100178622E

MASCHINENFABRIK REINHAUSEN GMBH COPYRIGHT RESERVED
THE REPRODUCTION, DISTRIBUTION AND UTILIZATION OF THIS DOCUMENT AS WELL AS THE COMMUNICATION OF ITS CONTENTS TO OTHERS WITHOUT EXPRESS AUTHORIZATION IS PROHIBITED. OFFENDERS WILL BE HELD LIABLE FOR THE PAYMENT OF DAMAGES. ALL RIGHTS RESERVED IN THE EVENT OF THE GRANT OF A PATENT, UTILITY MODEL OR DESIGN.

	WITHOUT CHANGE-OVER SELECTOR	0

	WITH CHANGE-OVER SELECTOR (REVERSING / COARSE CHANGE-OVER SELECTOR)	W, G

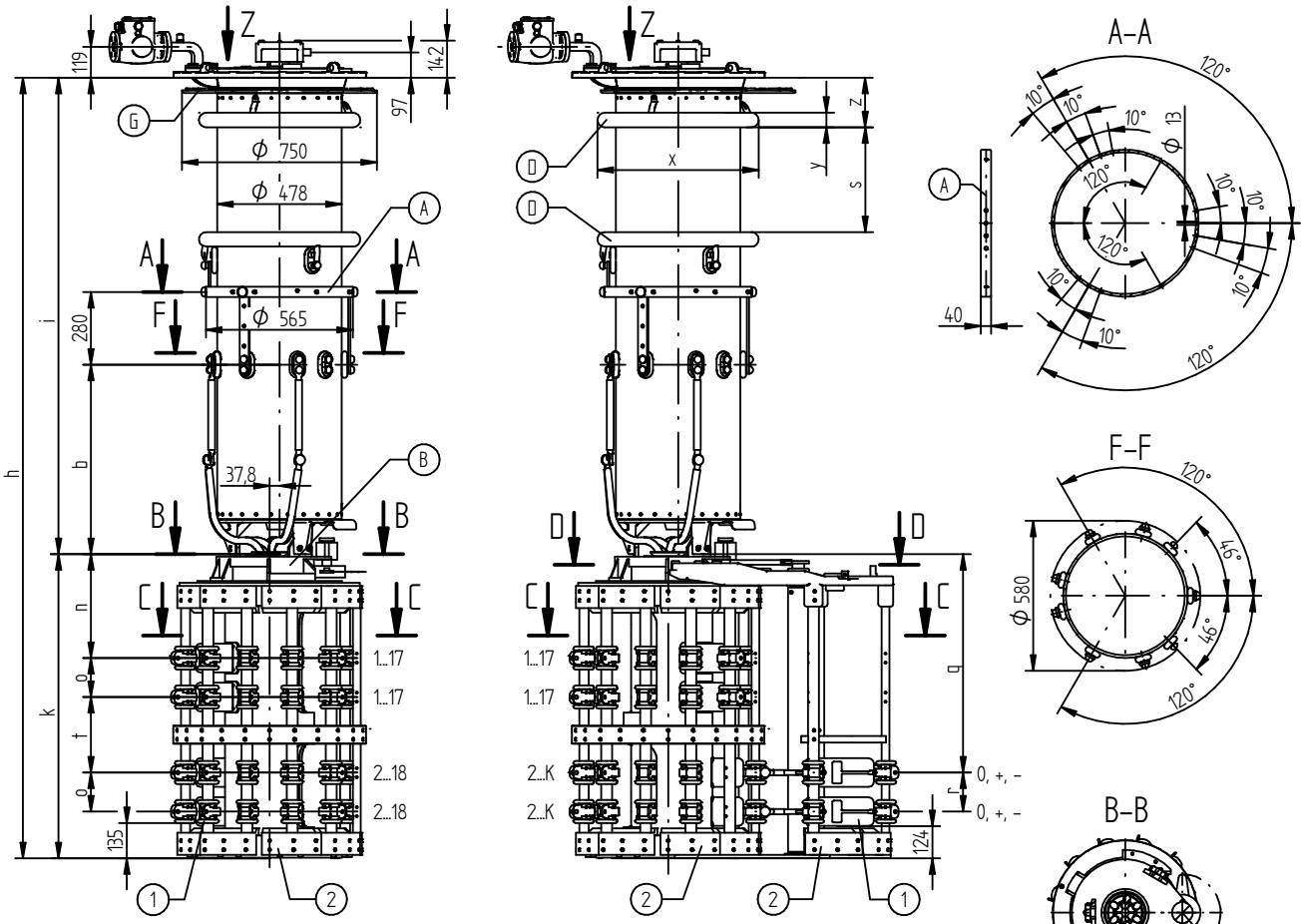

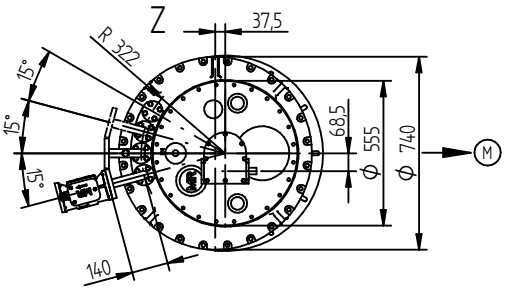

D–D
REVERSING CHANGE-OVER SELECTOR (1W)

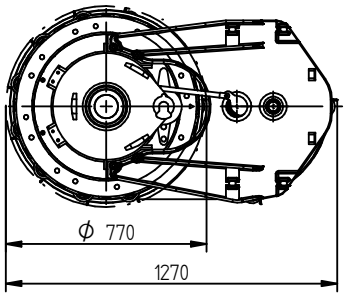

D–D
COARSE CHANGE-OVER SELECTOR (1G)

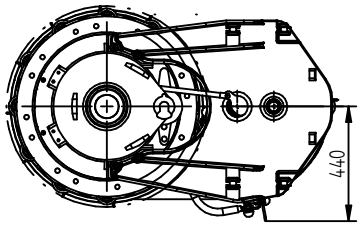

FOR THE TYPE OF OLTC-HEAD REFER TO THE ORDER-SPECIFIC DRAWING OF THE OLTC-HEAD AND DRIVE SHAFTS

(M) – DRIVE SIDE OF SELECTOR
(A) – ON-LOAD TAP-CHANGER CURRENT TAKE-OFF TERMINAL
(B) – IS CONNECTED TO POTENTIAL OF (A)
(D) – SHIELDING RINGS FOR UM OF 170 kV OR GREATER
(G) – SUPPORTING FLANGE FOR THE BELL-TYPE TANK INSTALLATION IS OPTIONAL
(1) – BOTTOM-MOST LIVE PARTS; THESE ARE CONNECTED TO THE POTENTIAL OF THE ASSOCIATED AND/OR WIRED CONNECTION CONTACT
(2) – SELECTOR BASE IS MADE OF INSULATING MATERIAL

– THE DETAILED CONNECTION DIAGRAM IS BINDING FOR THE DESIGNATION OF THE CONNECTION CONTACTS AND PHASES
– C–C: REFER TO 10016570
– D–D: TYPE WITH CONNECTING LEAD 3W/3G REFER TO 10017264

	DATE	NAME	DOCUMENT NO.	
DFTR.	10.05.2021	RAEDLINGER	SED 5144510 001 02	
EHKO.	21.05.2021	HAUER	CHANGE NO.	SCALE
STAND	21.05.2021	WANNINGER	1106874	1:10

DIMENSION IN mm EXCEPT AS NOTED

ON-LOAD TAP-CHANGER VACUTAP® VR®
VRS/M/L/H I 2622-72,5...420 kV-RE-WITH FORCED CURRENT SPLITTING
DIMENSION DRAWING

SERIAL NUMBER –
MATERIAL NUMBER 100178631E
SHEET 1/2

MASCHINENFABRIK REINHAUSEN GMBH COPYRIGHT RESERVED
THE REPRODUCTION, DISTRIBUTION AND UTILIZATION OF THIS DOCUMENT AS WELL AS THE COMMUNICATION OF ITS CONTENTS TO OTHERS WITHOUT EXPRESS AUTHORIZATION IS PROHIBITED. OFFENDERS WILL BE HELD LIABLE FOR THE PAYMENT OF DAMAGES. ALL RIGHTS RESERVED IN THE EVENT OF THE GRANT OF A PATENT, UTILITY MODEL OR DESIGN.

VACUTAP® VRS

SELECTOR SIZE		RE						
Um [kV]		72,5	123	170	245	300	362	420
DIMENSIONS [mm]	h	2337	2467	2597	2697	2849	2952	3071
	i	1168	1298	1428	1528	1680	1783	1902
	b	425						
	s	–	–	302	402	554	573	692
	z	–	–	191	191	191	228	228
	x	–	–	Φ 620	Φ 620	Φ 620	Φ 695	Φ 695
	y	–	–	Φ 56	Φ 56	Φ 56	Φ100	Φ100
	k	1169						
	n	399						
	o	150						
	t	290						
	r	150						
	q	839						
OIL VOLUME [dm³]		155	175	195	215	235	255	275
DISPLACEMENT [dm³]		298	318	348	368	398	438	458
MAX. WEIGHT [kg]		512	518	531	534	540	547	552

VACUTAP® VRM

SELECTOR SIZE		RE						
Um [kV]		72,5	123	170	245	300	362	420
DIMENSIONS [mm]	h	2488	2618	2748	2848	3000	3103	3222
	i	1319	1449	1579	1679	1831	1934	2053
	b	576						
	s	–	–	302	402	554	573	692
	z	–	–	191	191	191	228	228
	x	–	–	Φ 620	Φ 620	Φ 620	Φ 695	Φ 695
	y	–	–	Φ 56	Φ 56	Φ 56	Φ100	Φ100
	k	1169						
	n	399						
	o	150						
	t	290						
	r	150						
	q	839						
OIL VOLUME [dm³]		175	195	225	240	265	280	300
DISPLACEMENT [dm³]		318	348	378	398	428	468	488
MAX. WEIGHT [kg]		528	534	546	550	556	562	567

VACUTAP® VRL / VRH

SELECTOR SIZE		RE						
Um [kV]		72,5	123	170	245	300	362	420
DIMENSIONS [mm]	h	2640	2770	2900	3000	3152	3255	3374
	i	1471	1601	1731	1831	1983	2086	2205
	b	728						
	s	–	–	302	402	554	573	692
	z	–	–	191	191	191	228	228
	x	–	–	Φ 620	Φ 620	Φ 620	Φ 695	Φ 695
	y	–	–	Φ 56	Φ 56	Φ 56	Φ100	Φ100
	k	1169						
	n	399						
	o	150						
	t	290						
	r	150						
	q	839						
OIL VOLUME [dm³]		205	225	245	265	285	305	325
DISPLACEMENT [dm³]		348	378	408	428	458	498	518
MAX. WEIGHT [kg]		541	547	559	563	569	576	581

	DATE	NAME	DOCUMENT NO.	
DFTR.	10.05.2021	RAEDLINGER	SED 5144510 001 02	SCALE 1:10
EHKO.	21.05.2021	HAUER	CHANGE NO. 1106874	
STAND	21.05.2021	WANNINGER		

DIMENSION IN mm EXCEPT AS NOTED

ON-LOAD TAP-CHANGER VACUTAP® VR®
VRS/M/L/H I 2622-72,5...420 kV-RE-WITH FORCED CURRENT SPLITTING
DIMENSION DRAWING

SERIAL NUMBER –

MATERIAL NUMBER 100178631E

SHEET 2/2

MASCHINENFABRIK REINHAUSEN GMBH COPYRIGHT RESERVED
THE REPRODUCTION, DISTRIBUTION AND UTILIZATION OF THIS DOCUMENT AS WELL AS THE COMMUNICATION OF ITS CONTENTS TO OTHERS WITHOUT EXPRESS AUTHORIZATION IS PROHIBITED. OFFENDERS WILL BE HELD LIABLE FOR THE PAYMENT OF DAMAGES. ALL RIGHTS RESERVED IN THE EVENT OF THE GRANT OF A PATENT, UTILITY MODEL OR DESIGN.

	DATE	NAME	DOCUMENT NO.	
DFTR.	07.05.2021	RAEDLINGER	SED 5152467 001 03	
EHKO.	21.05.2021	HAUER	CHANGE NO.	SCALE
STAND	21.05.2021	WANNINGER	1106874	1:10

WITH CHANGE-OVER SELECTOR (REVERSING / COARSE CHANGE-OVER SELECTOR) | W, G

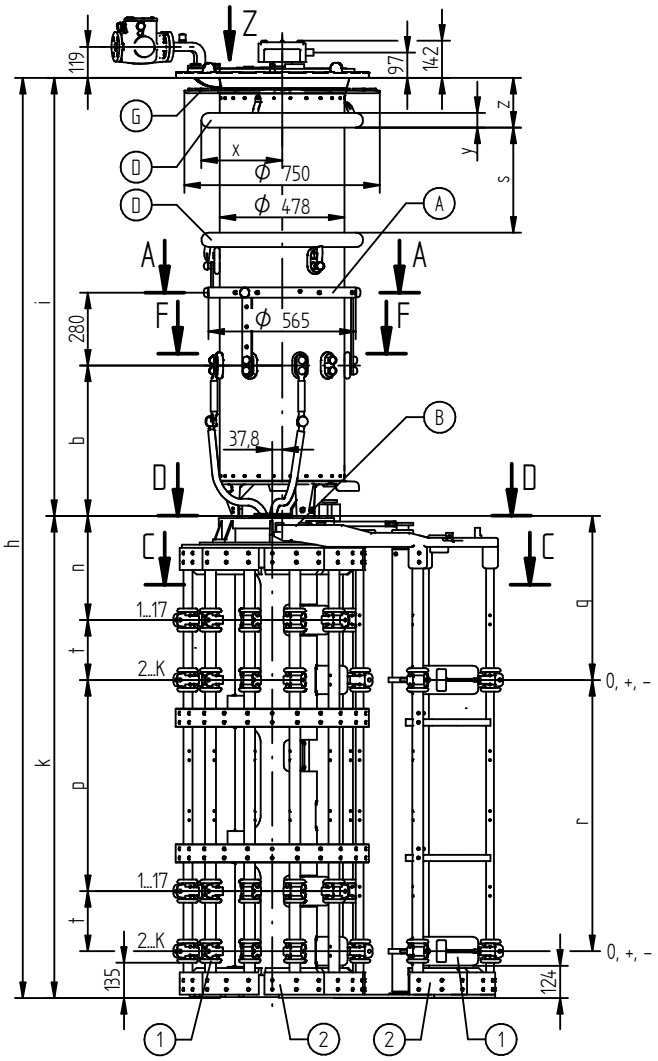

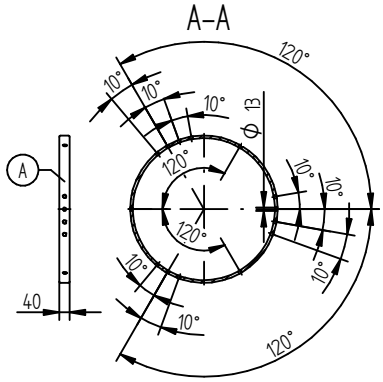

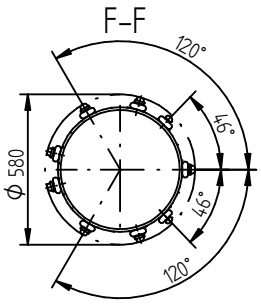

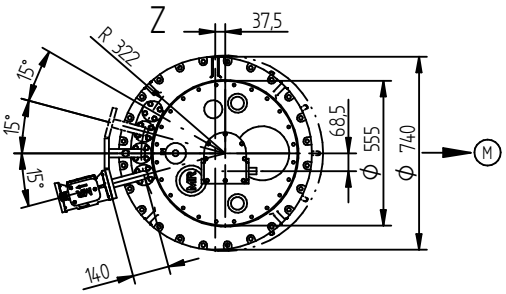

FOR THE TYPE OF OLTC-HEAD REFER TO THE ORDER-SPECIFIC DRAWING OF THE OLTC-HEAD AND DRIVE SHAFTS

D–D
REVERSING CHANGE-OVER SELECTOR (1W)

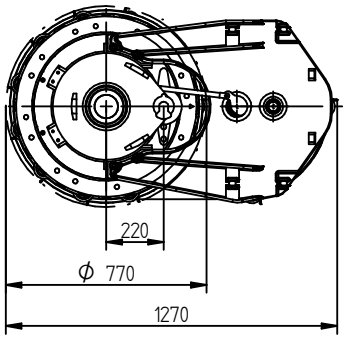

D–D
COARSE CHANGE-OVER SELECTOR (1G)

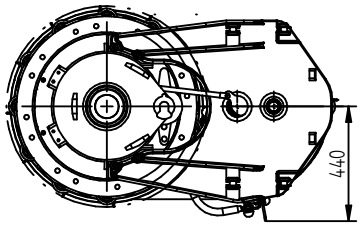

(M) – DRIVE SIDE OF SELECTOR
(A) – ON-LOAD TAP-CHANGER CURRENT TAKE-OFF TERMINAL
(B) – IS CONNECTED TO POTENTIAL OF (A)
(D) – SHIELDING RINGS FOR UM OF 170 kV OR GREATER
(G) – SUPPORTING FLANGE FOR THE BELL-TYPE TANK INSTALLATION IS OPTIONAL
(1) – BOTTOM-MOST LIVE PARTS; THESE ARE CONNECTED TO THE POTENTIAL OF THE ASSOCIATED AND/OR WIRED CONNECTION CONTACT
(2) – SELECTOR BASE IS MADE OF INSULATING MATERIAL

– THE DETAILED CONNECTION DIAGRAM IS BINDING FOR THE DESIGNATION OF THE CONNECTION CONTACTS AND PHASES
– C-C: REFER TO 10016570
– D-D: TYPE WITH CONNECTING LEAD 3W/3G REFER TO 10017264

DIMENSION IN mm EXCEPT AS NOTED

ON-LOAD TAP-CHANGER VACUTAP® VR®
VRX I 652/1302 – 72,5...420 kV – RES
DIMENSION DRAWING

SERIAL NUMBER –
MATERIAL NUMBER 100178673E
SHEET 1/2

MASCHINENFABRIK REINHAUSEN GMBH COPYRIGHT RESERVED
THE REPRODUCTION, DISTRIBUTION AND UTILIZATION OF THIS DOCUMENT AS WELL AS THE COMMUNICATION OF ITS CONTENTS TO OTHERS WITHOUT EXPRESS AUTHORIZATION IS PROHIBITED. OFFENDERS WILL BE HELD LIABLE FOR THE PAYMENT OF DAMAGES. ALL RIGHTS RESERVED IN THE EVENT OF THE GRANT OF A PATENT, UTILITY MODEL OR DESIGN.

VACUTAP® VRX I 652

SELECTOR SIZE		RES						
Um [kV]		72,5	123	170	245	300	362	420
DIMENSIONS [mm]	h	3168	3298	3428	3528	3680	3783	3902
	i	1319	1449	1579	1679	1831	1934	2053
	b	576						
	s	–	–	302	402	554	573	692
	z	–	–	191	191	191	228	228
	x	–	–	Φ 620	Φ 620	Φ 620	Φ 695	Φ 695
	y	–	–	Φ 56	Φ 56	Φ 56	Φ 100	Φ 100
	k	1849						
	n	399						
	t	230						
	p	810						
	r	1040						
	q	629						
OIL VOLUME [dm³]		175	195	225	240	265	280	300
DISPLACEMENT [dm³]		460	490	520	540	570	610	630
MAX. WEIGHT [kg]		609	615	627	631	637	643	648

VACUTAP® VRX I 1302

SELECTOR SIZE		RES						
Um [kV]		72,5	123	170	245	300	362	420
DIMENSIONS [mm]	h	3320	3450	3580	3680	3832	3935	4054
	i	1471	1601	1731	1831	1983	2086	2205
	b	728						
	s	–	–	302	402	554	573	692
	z	–	–	191	191	191	228	228
	x	–	–	Φ 620	Φ 620	Φ 620	Φ 695	Φ 695
	y	–	–	Φ 56	Φ 56	Φ 56	Φ 100	Φ 100
	k	1849						
	n	399						
	t	230						
	p	810						
	r	1040						
	q	629						
OIL VOLUME [dm³]		205	225	245	265	285	305	325
DISPLACEMENT [dm³]		490	520	550	570	600	640	660
MAX. WEIGHT [kg]		622	628	640	644	650	657	662

	DATE	NAME	DOCUMENT NO.	
DFTR.	07.05.2021	RAEDLINGER	SED 5152467 001 03	SCALE 1:10
EHKO.	21.05.2021	HAUER	CHANGE NO.	
STAND.	21.05.2021	WANNINGER	1106874	

DIMENSION IN mm EXCEPT AS NOTED

ON-LOAD TAP-CHANGER VACUTAP® VR®
VRX I 652/1302 – 72,5...420 kV – RES
DIMENSION DRAWING

SERIAL NUMBER –

MATERIAL NUMBER 100178673E

© MASCHINENFABRIK REINHAUSEN GMBH 2018
THE REPRODUCTION, DISTRIBUTION AND UTILIZATION OF THIS DOCUMENT AS WELL AS THE COMMUNICATION OF ITS CONTENTS TO OTHERS WITHOUT EXPRESS AUTHORIZATION IS PROHIBITED. OFFENDERS WILL BE HELD LIABLE FOR THE PAYMENT OF DAMAGES. ALL RIGHTS RESERVED IN THE EVENT OF THE GRANT OF A PATENT, UTILITY MODEL OR DESIGN.

	DATE	NAME	DOCUMENT NO.	
DFTR.	18.01.2018	RAEDLINGER	SED 5144363 001 01	
CHKD.	23.01.2018	MENZELS	CHANGE NO.	SCALE
STAND.	23.01.2018	PRODASTSCHUK	1085481	1:10

WITHOUT CHANGE-OVER SELECTOR	0

WITH CHANGE-OVER SELECTOR (REVERSING / COARSE CHANGE-OVER SELECTOR)	W, G

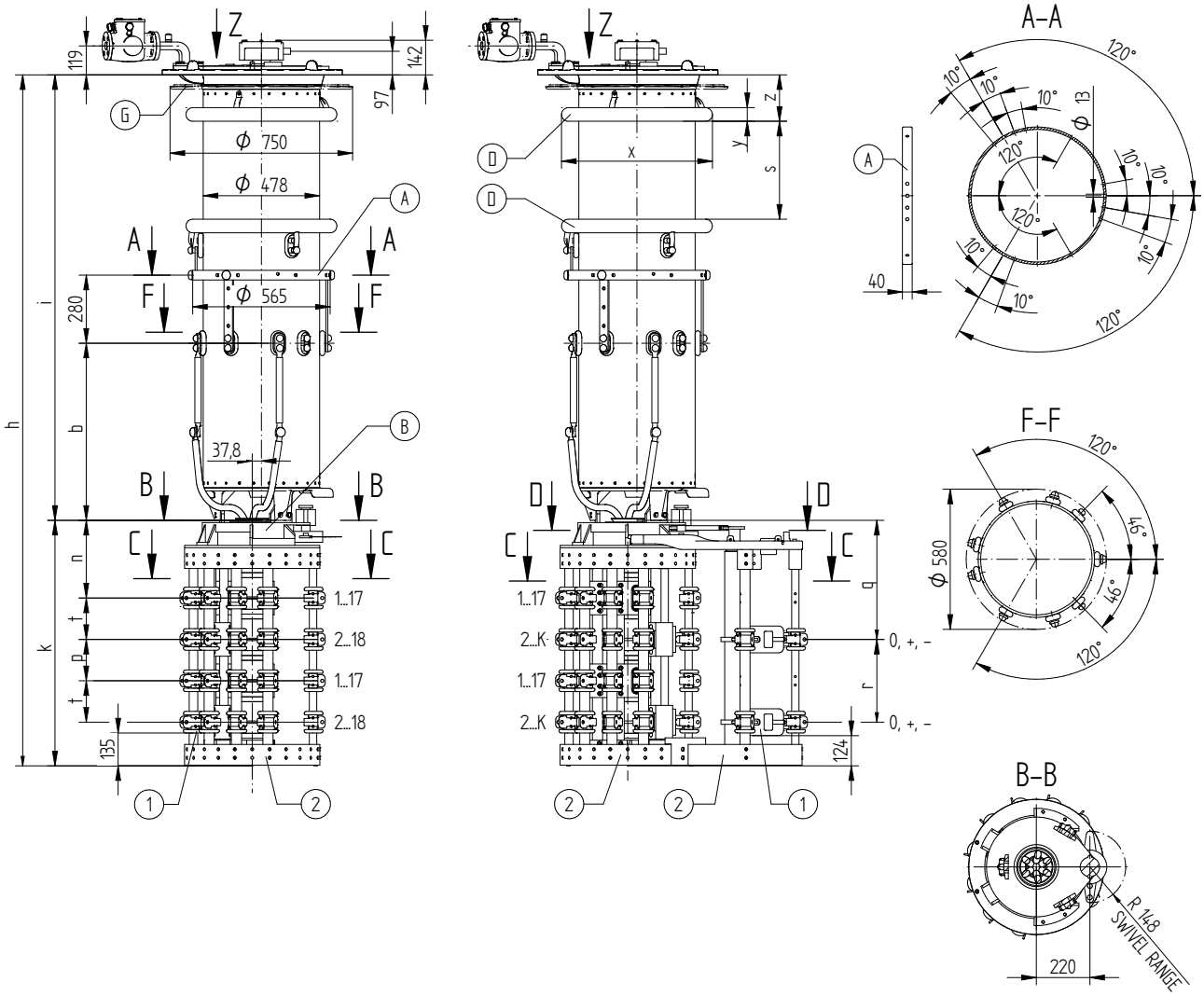

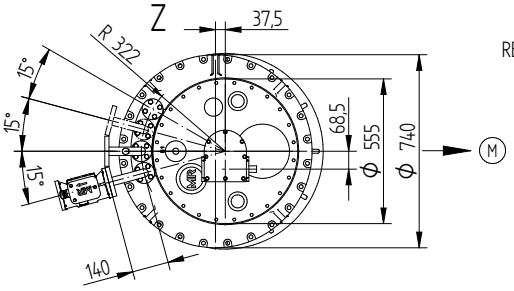

FOR THE TYPE OF OLTC-HEAD REFER TO THE ORDER-SPECIFIC DRAWING OF THE OLTC-HEAD AND DRIVE SHAFTS

D–D
REVERSING CHANGE-OVER SELECTOR (1W)

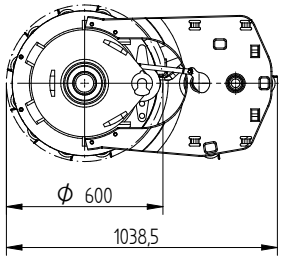

D–D
COARSE CHANGE-OVER SELECTOR (1G)

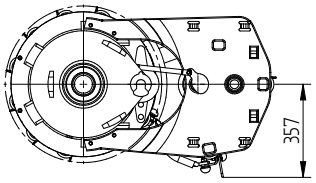

(M) – DRIVE SIDE OF SELECTOR
(A) – ON-LOAD TAP-CHANGER CURRENT TAKE-OFF TERMINAL
(B) – IS CONNECTED TO POTENTIAL OF (A)
(D) – SHIELDING RINGS FOR UM OF 170 kV OR GREATER
(G) – SUPPORTING FLANGE FOR THE BELL-TYPE TANK INSTALLATION IS OPTIONAL
(1) – BOTTOM-MOST LIVE PARTS; THESE ARE CONNECTED TO THE POTENTIAL OF THE ASSOCIATED AND/OR WIRED CONNECTION CONTACT
(2) – SELECTOR BASE IS MADE OF INSULATING MATERIAL

– THE DETAILED CONNECTION DIAGRAM IS BINDING FOR THE DESIGNATION OF THE CONNECTION CONTACTS AND PHASES
– C-C: REFER TO 10009030
– D-D: TYPE WITH CONNECTING LEAD 3W/3G REFER TO 10010019

DIMENSION IN mm EXCEPT AS NOTED

ON-LOAD TAP-CHANGER VACUTAP® VR
VR S/M/L/H II 652/702/1002/1302 – 72,5...362 kV – RC/RD/RDE
DIMENSION DRAWING

SERIAL NUMBER

MATERIAL NUMBER 100178591E

SHEET 1/2

VACUTAP® VRS

SELECTOR SIZE		RC						RD / RDE					
Um [kV]		72,5	123	170	245	300	362	72,5	123	170	245	300	362
DIMENSIONS [mm]	h	2177	2307	2437	2537	2689	2792	2337	2467	2597	2697	2849	2952
	i	1168	1298	1428	1528	1680	1783	1168	1298	1428	1528	1680	1783
	b	425						425					
	s	–	–	302	402	554	573	–	–	302	402	554	573
	z	–	–	191	191	191	228	–	–	191	191	191	228
	x	–	–	Φ 620	Φ 620	Φ 620	Φ 695	–	–	Φ 620	Φ 620	Φ 620	Φ 695
	y	–	–	Φ 56	Φ 56	Φ 56	Φ100	–	–	Φ 56	Φ 56	Φ 56	Φ100
	k	1009						1169					
	n	319						359					
	t	170						210					
	p	170						210					
	r	340						420					
	q	489						569					
OIL VOLUME [dm³]		155	175	195	215	235	255	155	175	195	215	235	255
DISPLACEMENT [dm³]		263	283	313	333	363	403	266	286	316	336	366	406
MAX. WEIGHT [kg]		434	440	453	456	462	469	442	448	461	464	470	477

VACUTAP® VRM / VRH 652

SELECTOR SIZE		RC						RD / RDE					
Um [kV]		72,5	123	170	245	300	362	72,5	123	170	245	300	362
DIMENSIONS [mm]	h	2328	2458	2588	2688	2840	2943	2488	2618	2748	2848	3000	3103
	i	1319	1449	1579	1679	1831	1934	1319	1449	1579	1679	1831	1934
	b	576						576					
	s	–	–	302	402	554	573	–	–	302	402	554	573
	z	–	–	191	191	191	228	–	–	191	191	191	228
	x	–	–	Φ 620	Φ 620	Φ 620	Φ 695	–	–	Φ 620	Φ 620	Φ 620	Φ 695
	y	–	–	Φ 56	Φ 56	Φ 56	Φ100	–	–	Φ 56	Φ 56	Φ 56	Φ100
	k	1009						1169					
	n	319						359					
	t	170						210					
	p	170						210					
	r	340						420					
	q	489						569					
OIL VOLUME [dm³]		175	195	225	240	265	280	175	195	225	240	265	280
DISPLACEMENT [dm³]		283	313	343	363	393	433	286	316	346	366	396	436
MAX. WEIGHT [kg]		450	456	468	472	478	484	458	464	476	480	486	492

VACUTAP® VRL / VRH 1302

SELECTOR SIZE		RC						RD / RDE					
Um [kV]		72,5	123	170	245	300	362	72,5	123	170	245	300	362
DIMENSIONS [mm]	h	2480	2610	2740	2840	2992	3095	2640	2770	2900	3000	3152	3255
	i	1471	1601	1731	1831	1983	2086	1471	1601	1731	1831	1983	2086
	b	728						728					
	s	–	–	302	402	554	573	–	–	302	402	554	573
	z	–	–	191	191	191	228	–	–	191	191	191	228
	x	–	–	Φ 620	Φ 620	Φ 620	Φ 695	–	–	Φ 620	Φ 620	Φ 620	Φ 695
	y	–	–	Φ 56	Φ 56	Φ 56	Φ100	–	–	Φ 56	Φ 56	Φ 56	Φ100
	k	1009						1169					
	n	319						359					
	t	170						210					
	p	170						210					
	r	340						420					
	q	489						569					
OIL VOLUME [dm³]		205	225	245	265	285	305	205	225	245	265	285	305
DISPLACEMENT [dm³]		313	343	373	393	423	463	316	346	376	396	426	466
MAX. WEIGHT [kg]		463	469	481	485	491	498	471	477	489	493	499	506

© MASCHINENFABRIK REINHAUSEN GMBH 2018
THE REPRODUCTION, DISTRIBUTION AND UTILIZATION OF THIS DOCUMENT AS WELL AS THE COMMUNICATION OF ITS CONTENTS TO OTHERS WITHOUT EXPRESS AUTHORIZATION IS PROHIBITED. OFFENDERS WILL BE HELD LIABLE FOR THE PAYMENT OF DAMAGES. ALL RIGHTS RESERVED IN THE EVENT OF THE GRANT OF A PATENT, UTILITY MODEL OR DESIGN.

	DATE	NAME	DOCUMENT NO.	
DFTR.	18.01.2018	RAEDLINGER	SED 5144363 001 01	
CHKD.	23.01.2018	MENZELS	CHANGE NO.	SCALE 1:10
STAND.	23.01.2018	PRODASTSCHUK	1085481	

DIMENSION IN mm EXCEPT AS NOTED

ON-LOAD TAP-CHANGER VACUTAP® VR
VR S/M/L/H II 652/702/1002/1302 – 72,5...362 kV – RC/RD/RDE
DIMENSION DRAWING

SERIAL NUMBER

MATERIAL NUMBER 100178591E

SHEET 2/2

© MASCHINENFABRIK REINHAUSEN GMBH 2016
THE REPRODUCTION, DISTRIBUTION AND UTILIZATION OF THIS DOCUMENT AS WELL AS THE COMMUNICATION OF ITS CONTENTS TO OTHERS WITHOUT EXPRESS AUTHORIZATION IS PROHIBITED. OFFENDERS WILL BE HELD LIABLE FOR THE PAYMENT OF DAMAGES. ALL RIGHTS RESERVED IN THE EVENT OF THE GRANT OF A PATENT, UTILITY MODEL OR DESIGN.

WITHOUT CHANGE-OVER SELECTOR	0

WITH CHANGE-OVER SELECTOR (REVERSING / COARSE CHANGE-OVER SELECTOR)	W, G

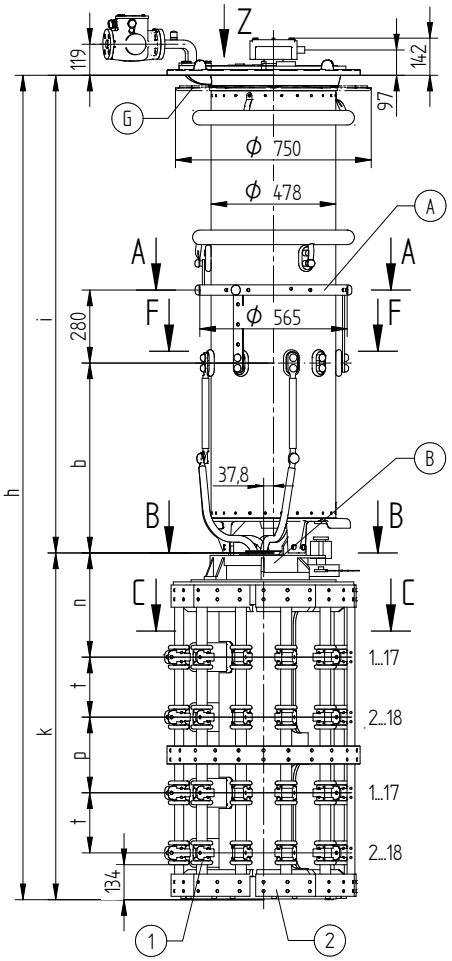

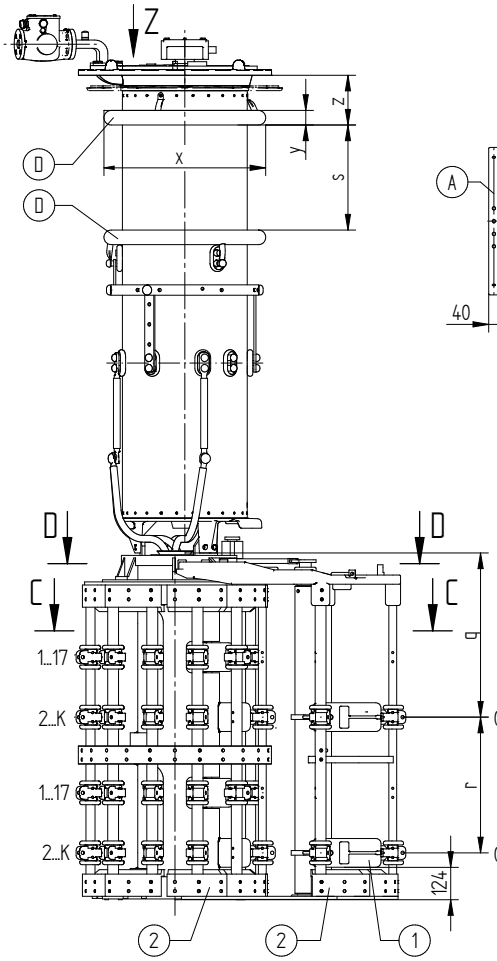

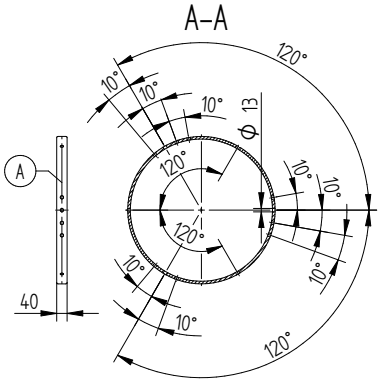

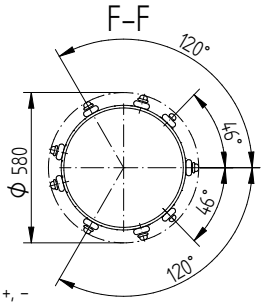

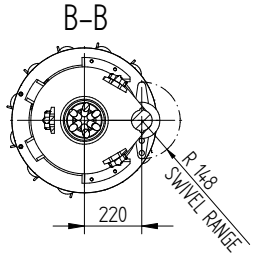

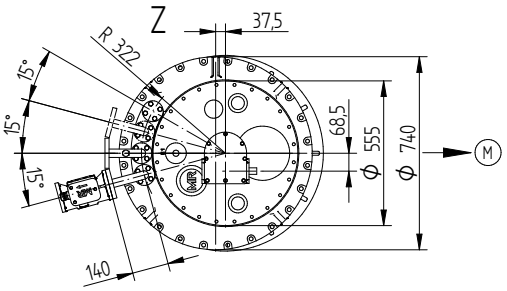

D–D
REVERSING CHANGE-OVER SELECTOR (1W)

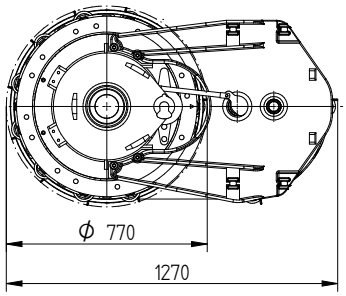

D–D
COARSE CHANGE-OVER SELECTOR (1G)

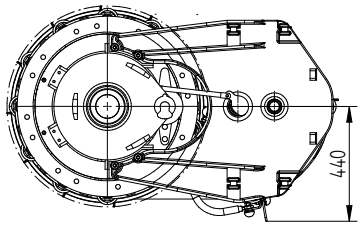

FOR THE TYPE OF OLTC-HEAD REFER TO THE ORDER-SPECIFIC DRAWING OF THE OLTC-HEAD AND DRIVE SHAFTS

(M) – DRIVE SIDE OF SELECTOR
(A) – ON-LOAD TAP-CHANGER CURRENT TAKE-OFF TERMINAL
(B) – IS CONNECTED TO POTENTIAL OF (A)
(D) – SHIELDING RINGS FOR UM OF 170 kV OR GREATER
(G) – SUPPORTING FLANGE FOR THE BELL-TYPE TANK INSTALLATION IS OPTIONAL
(1) – BOTTOM-MOST LIVE PARTS; THESE ARE CONNECTED TO THE POTENTIAL OF THE ASSOCIATED AND/OR WIRED CONNECTION CONTACT
(2) – SELECTOR BASE IS MADE OF INSULATING MATERIAL

– THE DETAILED CONNECTION DIAGRAM IS BINDING FOR THE DESIGNATION OF THE CONNECTION CONTACTS AND PHASES
– C–C: REFER TO 10016570
– D–D: TYPE WITH CONNECTING LEAD 3W/3G REFER TO 10017264

	DATE	NAME	DOCUMENT NO.	
DFTR.	24.10.2016	BUTERUS	SED 5144498 001 00	
CHKD.	26.10.2016	WREDE	CHANGE NO.	SCALE
STAND.	26.10.2016	PRODASTSCHUK	1077332	-

DIMENSION IN mm EXCEPT AS NOTED

ON-LOAD TAP-CHANGER VACUTAP® VR
VR S/M/L/H II 652/702/1002/1302 – 72,5...362 kV – RE/RF
DIMENSION DRAWING

SERIAL NUMBER
–
MATERIAL NUMBER 100178600E
SHEET 1/2

VACUTAP® VRS

SELECTOR SIZE		RE						RF					
Um [kV]		72,5	123	170	245	300	362	72,5	123	170	245	300	362
DIMENSIONS [mm]	h	2498	2628	2758	2858	3010	3113	2578	2708	2838	2938	3090	3193
	i	1168	1298	1428	1528	1680	1783	1168	1298	1428	1528	1680	1783
	b	425						425					
	s	–	–	302	402	554	573	–	–	302	402	554	573
	z	–	–	191	191	191	228	–	–	191	191	191	228
	x	–	–	Φ 620	Φ 620	Φ 620	Φ 695	–	–	Φ 620	Φ 620	Φ 620	Φ 695
	y	–	–	Φ 56	Φ 56	Φ 56	Φ100	–	–	Φ 56	Φ 56	Φ 56	Φ100
	k	1330						1410					
	n	400						400					
	t	230						230					
	p	290						370					
	r	520						600					
	q	630						630					
OIL CONTENT [dm³]		155	175	195	215	235	255	155	175	195	215	235	255
DISPLACEMENT [dm³]		302	322	352	372	402	442	305	325	355	375	405	445
MAX. WEIGHT [kg]		512	518	531	534	540	547	519	525	538	541	547	554

VACUTAP® VRM / VRH 652

SELECTOR SIZE		RE						RF					
Um [kV]		72,5	123	170	245	300	362	72,5	123	170	245	300	362
DIMENSIONS [mm]	h	2650	2780	2910	3010	3162	3265	2730	2860	2990	3090	3242	3345
	i	1320	1450	1580	1680	1832	1935	1320	1450	1580	1680	1832	1935
	b	576						576					
	s	–	–	302	402	554	573	–	–	302	402	554	573
	z	–	–	191	191	191	228	–	–	191	191	191	228
	x	–	–	Φ 620	Φ 620	Φ 620	Φ 695	–	–	Φ 620	Φ 620	Φ 620	Φ 695
	y	–	–	Φ 56	Φ 56	Φ 56	Φ100	–	–	Φ 56	Φ 56	Φ 56	Φ100
	k	1330						1410					
	n	400						400					
	t	230						230					
	p	290						370					
	r	520						600					
	q	630						630					
OIL CONTENT [dm³]		175	195	225	240	265	280	175	195	225	240	265	280
DISPLACEMENT [dm³]		322	352	382	402	432	472	325	355	385	405	435	475
MAX. WEIGHT [kg]		528	534	546	550	556	562	535	541	553	557	563	569

VACUTAP® VRL / VRH 1302

SELECTOR SIZE		RE						RF					
Um [kV]		72,5	123	170	245	300	362	72,5	123	170	245	300	362
DIMENSIONS [mm]	h	2801	2931	3061	3161	3313	3416	2881	3011	3141	3241	3393	3496
	i	1471	1601	1731	1831	1983	2086	1471	1601	1731	1831	1983	2086
	b	728						728					
	s	–	–	302	402	554	573	–	–	302	402	554	573
	z	–	–	191	191	191	228	–	–	191	191	191	228
	x	–	–	Φ 620	Φ 620	Φ 620	Φ 695	–	–	Φ 620	Φ 620	Φ 620	Φ 695
	y	–	–	Φ 56	Φ 56	Φ 56	Φ100	–	–	Φ 56	Φ 56	Φ 56	Φ100
	k	1330						1410					
	n	400						400					
	t	230						230					
	p	290						370					
	r	520						600					
	q	630						630					
OIL CONTENT [dm³]		205	225	245	265	285	305	205	225	245	265	285	305
DISPLACEMENT [dm³]		352	382	412	432	462	502	355	385	415	435	465	505
MAX. WEIGHT [kg]		541	547	559	563	569	576	548	554	566	570	576	583

© MASCHINENFABRIK REINHAUSEN GMBH 2016
THE REPRODUCTION, DISTRIBUTION AND UTILIZATION OF THIS DOCUMENT AS WELL AS THE COMMUNICATION OF ITS CONTENTS TO OTHERS WITHOUT EXPRESS AUTHORIZATION IS PROHIBITED. OFFENDERS WILL BE HELD LIABLE FOR THE PAYMENT OF DAMAGES. ALL RIGHTS RESERVED IN THE EVENT OF THE GRANT OF A PATENT, UTILITY MODEL OR DESIGN.

	DATE	NAME	DOCUMENT NO.	
DFTR.	24.10.2016	BUTERUS	SED 5144498 001 00	
CHKD.	26.10.2016	WREDE	CHANGE NO.	SCALE
STAND.	26.10.2016	PRODASTSCHUK	1077332	-

DIMENSION IN mm EXCEPT AS NOTED

ON-LOAD TAP-CHANGER VACUTAP® VR
VR S/M/L/H II 652/702/1002/1302 – 72,5...362 kV – RE/RF
DIMENSION DRAWING

SERIAL NUMBER –

MATERIAL NUMBER 100178600E

© MASCHINENFABRIK REINHAUSEN GMBH 2018
THE REPRODUCTION, DISTRIBUTION AND UTILIZATION OF THIS DOCUMENT AS WELL AS THE COMMUNICATION OF ITS CONTENTS TO OTHERS WITHOUT EXPRESS AUTHORIZATION IS PROHIBITED. OFFENDERS WILL BE HELD LIABLE FOR THE PAYMENT OF DAMAGES. ALL RIGHTS RESERVED IN THE EVENT OF THE GRANT OF A PATENT, UTILITY MODEL OR DESIGN.

	DATE	NAME	DOCUMENT NO.	
DFTR.	18.01.2018	RAEDLINGER	SED 5144516 001 02	
CHKD.	23.01.2018	MENZELS	CHANGE NO.	SCALE
STAND.	23.01.2018	PRODASTSCHUK	1085481	1:10

WITHOUT CHANGE-OVER SELECTOR	0

WITH CHANGE-OVER SELECTOR (REVERSING / COARSE CHANGE-OVER SELECTOR)	W, G

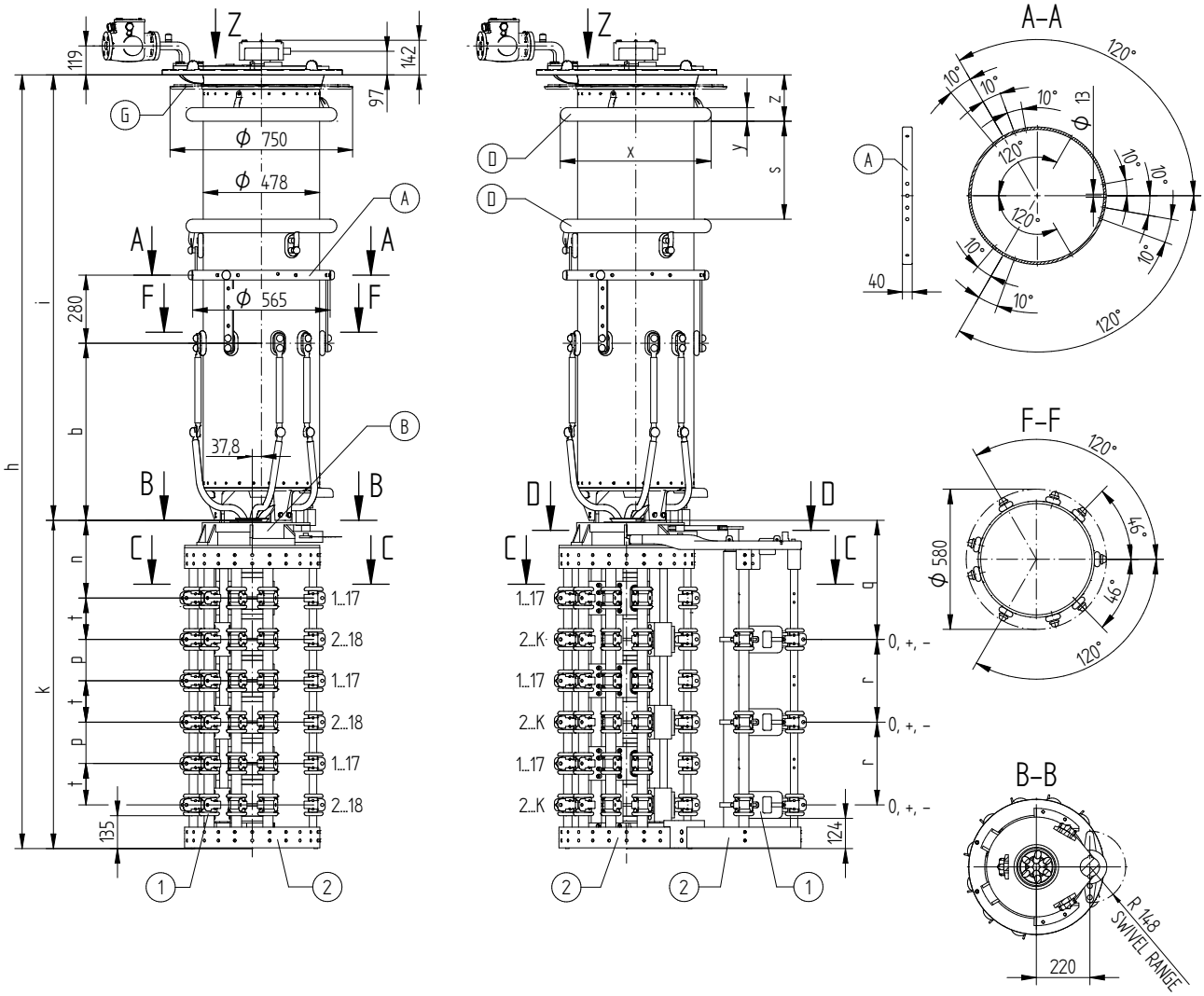

FOR THE TYPE OF OLTC-HEAD REFER TO THE ORDER-SPECIFIC DRAWING OF THE OLTC-HEAD AND DRIVE SHAFTS

(M) – DRIVE SIDE OF SELECTOR
(A) – ON-LOAD TAP-CHANGER CURRENT TAKE-OFF TERMINAL
(B) – IS CONNECTED TO POTENTIAL OF (A)
(D) – SHIELDING RINGS FOR UM OF 170 kV OR GREATER
(G) – SUPPORTING FLANGE FOR THE BELL-TYPE TANK INSTALLATION IS OPTIONAL
(1) – BOTTOM-MOST LIVE PARTS; THESE ARE CONNECTED TO THE POTENTIAL OF THE ASSOCIATED AND/OR WIRED CONNECTION CONTACT
(2) – SELECTOR BASE IS MADE OF INSULATING MATERIAL

– THE DETAILED CONNECTION DIAGRAM IS BINDING FOR THE DESIGNATION OF THE CONNECTION CONTACTS AND PHASES
– C-C: REFER TO 10009030
– D-D: TYPE WITH CONNECTING LEAD 3W/3G REFER TO 10010019

DIMENSION IN mm EXCEPT AS NOTED

ON-LOAD TAP-CHANGER VACUTAP® VR
VR S/M/L/H III 650/700/1000/1300 – 72,5...245 kV – RC/RD/RDE
DIMENSION DRAWING

SERIAL NUMBER

MATERIAL NUMBER 100178641E

SHEET 1/2

VACUTAP® VRS

SELECTOR SIZE		RC				RD / RDE			
Um [kV]		72,5	123	170	245	72,5	123	170	245
DIMENSIONS [mm]	h	2517	2647	2777	2877	2757	2887	3017	3117
	i	1168	1298	1428	1528	1168	1298	1428	1528
	b	425				425			
	s	–	–	302	402	–	–	302	402
	z	–	–	191	191	–	–	191	191
	x	–	–	Φ 620	Φ 620	–	–	Φ 620	Φ 620
	y	–	–	Φ 56	Φ 56	–	–	Φ 56	Φ 56
	k	1349				1589			
	n	319				359			
	t	170				210			
	p	170				210			
	r	340				420			
	q	489				569			
OIL VOLUME [dm³]		150	170	190	210	150	170	190	210
DISPLACEMENT [dm³]		278	298	328	348	284	304	334	354
MAX. WEIGHT [kg]		502	508	520	524	514	520	532	536

VACUTAP® VRM / VRH 650

SELECTOR SIZE		RC				RD / RDE			
Um [kV]		72,5	123	170	245	72,5	123	170	245
DIMENSIONS [mm]	h	2668	2798	2928	3028	2908	3038	3168	3268
	i	1319	1449	1579	1679	1319	1449	1579	1679
	b	576				576			
	s	–	–	302	402	–	–	302	402
	z	–	–	191	191	–	–	191	191
	x	–	–	Φ 620	Φ 620	–	–	Φ 620	Φ 620
	y	–	–	Φ 56	Φ 56	–	–	Φ 56	Φ 56
	k	1349				1589			
	n	319				359			
	t	170				210			
	p	170				210			
	r	340				420			
	q	489				569			
OIL VOLUME [dm³]		170	190	220	235	170	190	220	235
DISPLACEMENT [dm³]		298	328	358	378	304	334	364	384
MAX. WEIGHT [kg]		522	529	541	545	534	541	553	557

VACUTAP® VRL / VRH 1300

SELECTOR SIZE		RC				RD / RDE			
Um [kV]		72,5	123	170	245	72,5	123	170	245
DIMENSIONS [mm]	h	2820	2950	3080	3180	3060	3190	3320	3420
	i	1471	1601	1731	1831	1471	1601	1731	1831
	b	728				728			
	s	–	–	302	402	–	–	302	402
	z	–	–	191	191	–	–	191	191
	x	–	–	Φ 620	Φ 620	–	–	Φ 620	Φ 620
	y	–	–	Φ 56	Φ 56	–	–	Φ 56	Φ 56
	k	1349				1589			
	n	319				359			
	t	170				210			
	p	170				210			
	r	340				420			
	q	489				569			
OIL VOLUME [dm³]		200	220	240	260	200	220	240	260
DISPLACEMENT [dm³]		328	358	388	408	334	364	394	414
MAX. WEIGHT [kg]		540	546	559	562	552	558	571	574

© MASCHINENFABRIK REINHAUSEN GMBH 2018
THE REPRODUCTION, DISTRIBUTION AND UTILIZATION OF THIS DOCUMENT AS WELL AS THE COMMUNICATION OF ITS CONTENTS TO OTHERS WITHOUT EXPRESS AUTHORIZATION IS PROHIBITED. OFFENDERS WILL BE HELD LIABLE FOR THE PAYMENT OF DAMAGES. ALL RIGHTS RESERVED IN THE EVENT OF THE GRANT OF A PATENT, UTILITY MODEL OR DESIGN.

	DATE	NAME	DOCUMENT NO.	
DFTR.	18.01.2018	RAEDLINGER	SED 5144516 001 02	
CHKD.	23.01.2018	MENZELS	CHANGE NO.	SCALE 1:10
STAND.	23.01.2018	PRODASTSCHUK	1085481	

DIMENSION IN mm EXCEPT AS NOTED

ON-LOAD TAP-CHANGER VACUTAP® VR
VR S/M/L/H III 650/700/1000/1300 – 72,5...245 kV – RC/RD/RDE
DIMENSION DRAWING

SERIAL NUMBER

MATERIAL NUMBER 100178641E

SHEET 2/2

© MASCHINENFABRIK REINHAUSEN GMBH 2016
THE REPRODUCTION, DISTRIBUTION AND UTILIZATION OF THIS DOCUMENT AS WELL AS THE COMMUNICATION OF ITS CONTENTS TO OTHERS WITHOUT EXPRESS AUTHORIZATION IS PROHIBITED. OFFENDERS WILL BE HELD LIABLE FOR THE PAYMENT OF DAMAGES. ALL RIGHTS RESERVED IN THE EVENT OF THE GRANT OF A PATENT, UTILITY MODEL OR DESIGN.

WITHOUT CHANGE-OVER SELECTOR	0

WITH CHANGE-OVER SELECTOR (REVERSING / COARSE CHANGE-OVER SELECTOR)	W, G

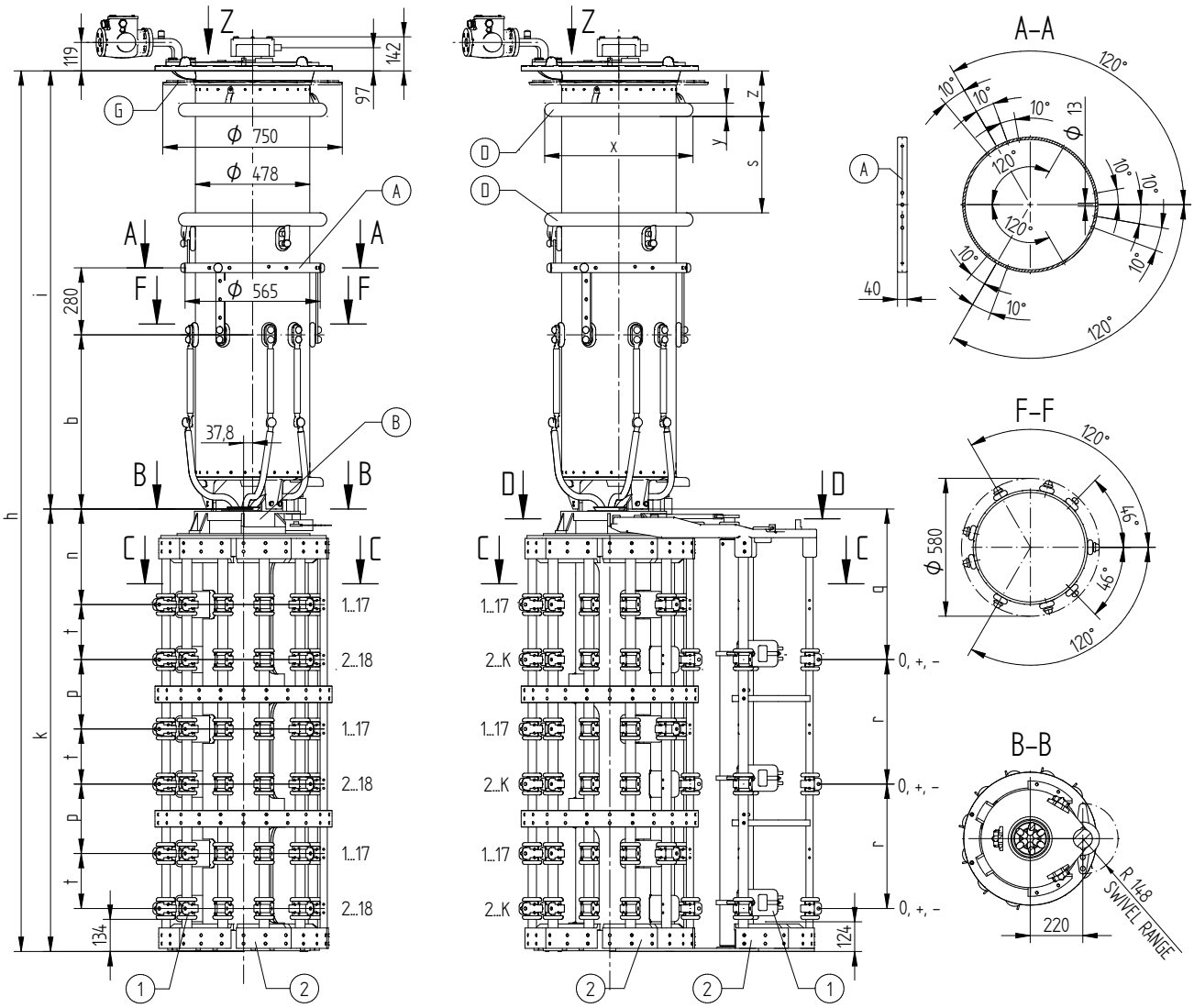

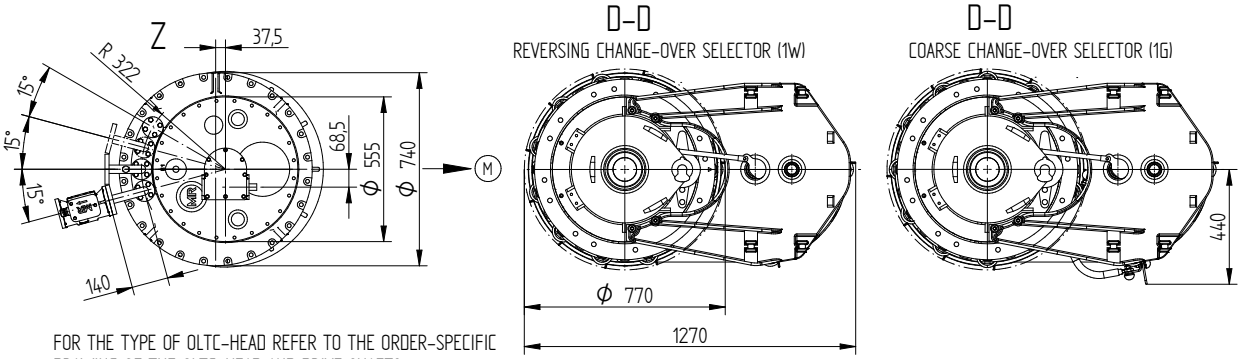

FOR THE TYPE OF OLTC-HEAD REFER TO THE ORDER-SPECIFIC DRAWING OF THE OLTC-HEAD AND DRIVE SHAFTS

(M) – DRIVE SIDE OF SELECTOR
(A) – ON-LOAD TAP-CHANGER CURRENT TAKE-OFF TERMINAL
(B) – IS CONNECTED TO POTENTIAL OF (A)
(D) – SHIELDING RINGS FOR UM OF 170 kV OR GREATER
(G) – SUPPORTING FLANGE FOR THE BELL-TYPE TANK INSTALLATION IS OPTIONAL
(1) – BOTTOM-MOST LIVE PARTS; THESE ARE CONNECTED TO THE POTENTIAL OF THE ASSOCIATED AND/OR WIRED CONNECTION CONTACT
(2) – SELECTOR BASE IS MADE OF INSULATING MATERIAL

– THE DETAILED CONNECTION DIAGRAM IS BINDING FOR THE DESIGNATION OF THE CONNECTION CONTACTS AND PHASES
– C–C: REFER TO 10016570
– D–D: TYPE WITH CONNECTING LEAD 3W/3G REFER TO 10017264

	DATE	NAME	DOCUMENT NO.	
DFTR.	25.10.2016	BUTERUS	SED 5152434 001 00	
CHKD.	26.10.2016	WREDE	CHANGE NO.	SCALE
STAND.	26.10.2016	PRODASTSCHUK	1077332	-

DIMENSION IN mm EXCEPT AS NOTED

ON-LOAD TAP-CHANGER VACUTAP® VR
VR S/M/L/H III 650/700/1000/1300 – 72,5...245 kV – RE/RF
DIMENSION DRAWING

SERIAL NUMBER
–
MATERIAL NUMBER 100178650E
SHEET 1/2

VACUTAP® VRS

SELECTOR SIZE		RE				RF			
Um [kV]		72,5	123	170	245	72,5	123	170	245
DIMENSIONS [mm]	h	3018	3148	3278	3378	3178	3308	3438	3538
	i	1168	1298	1428	1528	1168	1298	1428	1528
	b	425				425			
	s	–	–	302	402	–	–	302	402
	z	–	–	191	191	–	–	191	191
	x	–	–	Φ 620	Φ 620	–	–	Φ 620	Φ 620
	y	–	–	Φ 56	Φ 56	–	–	Φ 56	Φ 56
	k	1850				2010			
	n	400				400			
	t	230				230			
	p	290				370			
	r	520				600			
	q	630				630			
OIL CONTENT [dm³]		150	170	190	210	150	170	190	210
DISPLACEMENT [dm³]		331	351	381	401	336	356	386	406
MAX. WEIGHT [kg]		611	617	629	633	624	630	642	646

VACUTAP® VRM / VRH 650

SELECTOR SIZE		RE				RF			
Um [kV]		72,5	123	170	245	72,5	123	170	245
DIMENSIONS [mm]	h	3170	3300	3430	3530	3330	3460	3590	3690
	i	1320	1450	1580	1680	1320	1450	1580	1680
	b	576				576			
	s	–	–	302	402	–	–	302	402
	z	–	–	191	191	–	–	191	191
	x	–	–	Φ 620	Φ 620	–	–	Φ 620	Φ 620
	y	–	–	Φ 56	Φ 56	–	–	Φ 56	Φ 56
	k	1850				2010			
	n	400				400			
	t	230				230			
	p	290				370			
	r	520				600			
	q	630				630			
OIL CONTENT [dm³]		170	190	220	235	170	190	220	235
DISPLACEMENT [dm³]		351	381	411	431	356	386	416	436
MAX. WEIGHT [kg]		631	638	650	654	644	651	663	667

VACUTAP® VRL / VRH 1300

SELECTOR SIZE		RE				RF			
Um [kV]		72,5	123	170	245	72,5	123	170	245
DIMENSIONS [mm]	h	3321	3451	3581	3681	3481	3611	3741	3841
	i	1471	1601	1731	1831	1471	1601	1731	1831
	b	728				728			
	s	–	–	302	402	–	–	302	402
	z	–	–	191	191	–	–	191	191
	x	–	–	Φ 620	Φ 620	–	–	Φ 620	Φ 620
	y	–	–	Φ 56	Φ 56	–	–	Φ 56	Φ 56
	k	1850				2010			
	n	400				400			
	t	230				230			
	p	290				370			
	r	520				600			
	q	630				630			
OIL CONTENT [dm³]		200	220	240	260	200	220	240	260
DISPLACEMENT [dm³]		381	411	441	461	386	416	446	466
MAX. WEIGHT [kg]		649	655	668	671	662	668	681	684

© MASCHINENFABRIK REINHAUSEN GMBH 2016
THE REPRODUCTION, DISTRIBUTION AND UTILIZATION OF THIS DOCUMENT AS WELL AS THE COMMUNICATION OF ITS CONTENTS TO OTHERS WITHOUT EXPRESS AUTHORIZATION IS PROHIBITED. OFFENDERS WILL BE HELD LIABLE FOR THE PAYMENT OF DAMAGES. ALL RIGHTS RESERVED IN THE EVENT OF THE GRANT OF A PATENT, UTILITY MODEL OR DESIGN.

	DATE	NAME	DOCUMENT NO.	
DFTR.	25.10.2016	BUTERUS	SED 5152434 001 00	SCALE –
CHKD.	26.10.2016	WREDE	CHANGE NO.	
STAND.	26.10.2016	PRODASTSCHUK	1077332	

DIMENSION IN mm EXCEPT AS NOTED

ON-LOAD TAP-CHANGER VACUTAP® VR
VR S/M/L/H III 650/700/1000/1300 – 72,5...245 kV – RE/RF
DIMENSION DRAWING

SERIAL NUMBER –

MATERIAL NUMBER 100178650E

SHEET 2/2

© MASCHINENFABRIK REINHAUSEN GMBH 2018
THE REPRODUCTION, DISTRIBUTION AND UTILIZATION OF THIS DOCUMENT AS WELL AS THE COMMUNICATION OF ITS CONTENTS TO OTHERS WITHOUT EXPRESS AUTHORIZATION IS PROHIBITED. OFFENDERS WILL BE HELD LIABLE FOR THE PAYMENT OF DAMAGES. ALL RIGHTS RESERVED IN THE EVENT OF THE GRANT OF A PATENT, UTILITY MODEL OR DESIGN.

WITHOUT CHANGE-OVER SELECTOR	0

WITH REVERSING CHANGE-OVER SELECTOR	W

WITH COARSE CHANGE-OVER SELECTOR	G

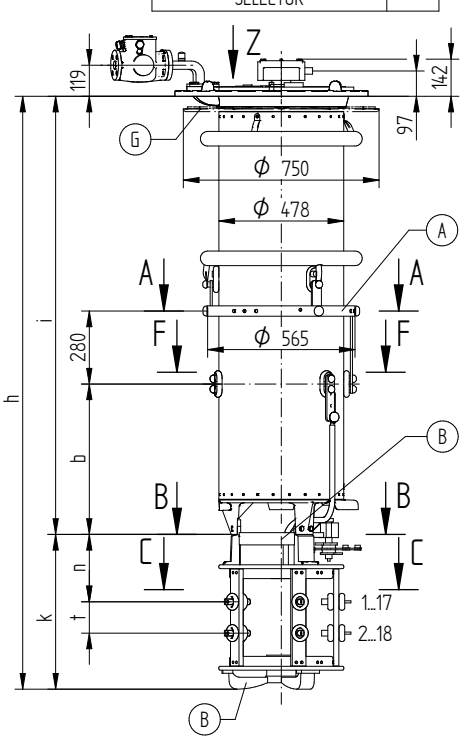

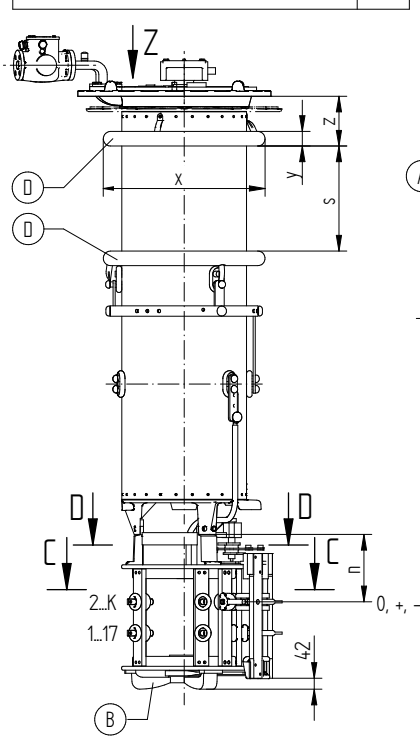

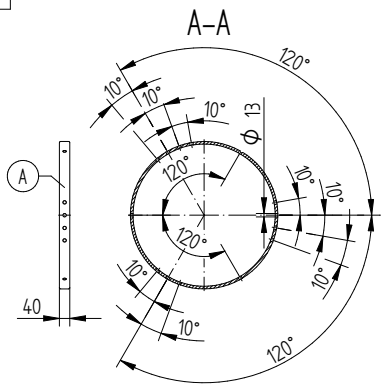

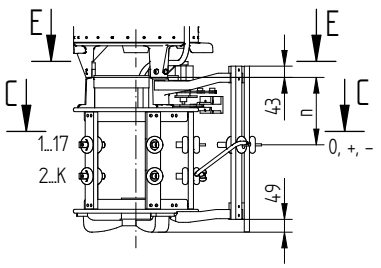

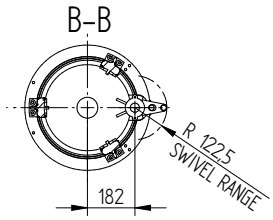

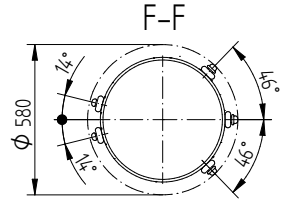

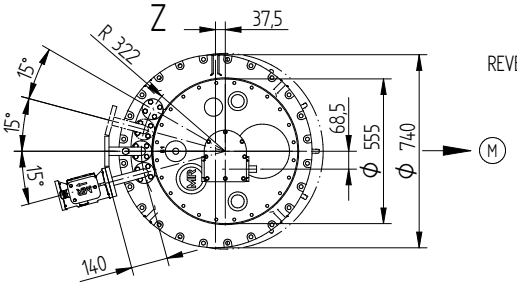

D–D
REVERSING CHANGE-OVER SELECTOR (1W)

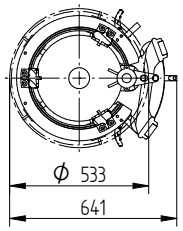

E–E
COARSE CHANGE-OVER SELECTOR (1G)

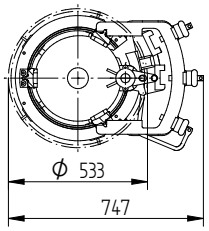

FOR THE TYPE OF OLTC-HEAD REFER TO THE ORDER-SPECIFIC DRAWING OF THE OLTC-HEAD AND DRIVE SHAFTS

(M) – DRIVE SIDE OF SELECTOR
(A) – ON-LOAD TAP-CHANGER CURRENT TAKE-OFF TERMINAL
(B) – IS CONNECTED TO POTENTIAL OF (A)
(D) – SHIELDING RINGS FOR UM OF 170 kV OR GREATER
(G) – SUPPORTING FLANGE FOR THE BELL-TYPE TANK INSTALLATION IS OPTIONAL

– THE DETAILED CONNECTION DIAGRAM IS BINDING FOR THE DESIGNATION OF THE CONNECTION CONTACTS AND PHASES
– C-C: REFER TO 10018046
– D-D AND E-E: TYPE WITH CONNECTING LEAD 3W/3G REFER TO 723590

	DATE	NAME	DOCUMENT NO.	
DFTR.	16.05.2018	RAEDLINGER	SED 5143085 001 01	
CHKD.	16.05.2018	HAUER	CHANGE NO.	SCALE
STAND.	16.05.2018	PRODASTSCHUK	1087395	1:10

DIMENSION IN mm EXCEPT AS NOTED

ON-LOAD TAP-CHANGER VACUTAP® VR
VRS/M I 701 – 72,5...420 kV – B/C/D/DE
DIMENSION DRAWING

SERIAL NUMBER

MATERIAL NUMBER 100178581E

SHEET 1/2

VACUTAP® VRS

SELECTOR SIZE		B							C							D/DE						
Um [kV]		72,5	123	170	245	300	362	420	72,5	123	170	245	300	362	420	72,5	123	170	245	300	362	420
DIMENSIONS [mm]	h	1686	1816	1946	2046	2198	2301	2420	1761	1891	2021	2121	2273	2376	2495	1956	2086	2216	2316	2468	2571	2690
	i	1168	1298	1428	1528	1680	1783	1902	1168	1298	1428	1528	1680	1783	1902	1168	1298	1428	1528	1680	1783	1902
	b	425							425							425						
	s	–	–	302	402	554	573	692	–	–	302	402	554	573	692	–	–	302	402	554	573	692
	z	–	–	191	191	191	228	228	–	–	191	191	191	228	228	–	–	191	191	191	228	228
	x	–	–	ϕ 620	ϕ 620	ϕ 620	ϕ 695	ϕ 695	–	–	ϕ 620	ϕ 620	ϕ 620	ϕ 695	ϕ 695	–	–	ϕ 620	ϕ 620	ϕ 620	ϕ 695	ϕ 695
	y	–	–	ϕ 56	ϕ 56	ϕ 56	ϕ100	ϕ100	–	–	ϕ 56	ϕ 56	ϕ 56	ϕ100	ϕ100	–	–	ϕ 56	ϕ 56	ϕ 56	ϕ100	ϕ100
	k	518							593							788						
	n	233							258							323						
	t	95							120							185						
OIL CONTENT [dm³]		160	180	200	220	240	260	280	160	180	200	220	240	260	280	160	180	200	220	240	260	280
DISPLACEMENT [dm³]		258	278	308	328	358	398	418	258	278	308	328	358	398	418	260	280	310	330	360	400	420
MAX. WEIGHT [kg]		312	318	331	334	340	347	352	322	328	341	344	350	357	362	333	339	352	355	361	368	373

VACUTAP® VRM

SELECTOR SIZE		B							C							D/DE						
Um [kV]		72,5	123	170	245	300	362	420	72,5	123	170	245	300	362	420	72,5	123	170	245	300	362	420
DIMENSIONS [mm]	h	1838	1968	2098	2198	2350	2453	2572	1913	2043	2173	2273	2425	2528	2647	2108	2238	2368	2468	2620	2723	2842
	i	1320	1450	1580	1680	1832	1935	2054	1320	1450	1580	1680	1832	1935	2054	1320	1450	1580	1680	1832	1935	2054
	b	576							576							576						
	s	–	–	302	402	554	573	692	–	–	302	402	554	573	692	–	–	302	402	554	573	692
	z	–	–	191	191	191	228	228	–	–	191	191	191	228	228	–	–	191	191	191	228	228
	x	–	–	ϕ 620	ϕ 620	ϕ 620	ϕ 695	ϕ 695	–	–	ϕ 620	ϕ 620	ϕ 620	ϕ 695	ϕ 695	–	–	ϕ 620	ϕ 620	ϕ 620	ϕ 695	ϕ 695
	y	–	–	ϕ 56	ϕ 56	ϕ 56	ϕ100	ϕ100	–	–	ϕ 56	ϕ 56	ϕ 56	ϕ100	ϕ100	–	–	ϕ 56	ϕ 56	ϕ 56	ϕ100	ϕ100
	k	518							593							788						
	n	233							258							323						
	t	95							120							185						
OIL CONTENT [dm³]		180	200	230	245	270	285	305	180	200	230	245	270	285	305	180	200	230	245	270	285	305
DISPLACEMENT [dm³]		278	308	338	358	388	428	448	278	308	338	358	388	428	448	280	310	340	360	390	430	450
MAX. WEIGHT [kg]		321	327	340	344	349	356	361	331	337	350	354	359	366	371	342	348	361	365	370	377	382

© MASCHINENFABRIK REINHAUSEN GMBH 2018
THE REPRODUCTION, DISTRIBUTION AND UTILIZATION OF THIS DOCUMENT AS WELL AS THE COMMUNICATION OF ITS CONTENTS TO OTHERS WITHOUT EXPRESS AUTHORIZATION IS PROHIBITED. OFFENDERS WILL BE HELD LIABLE FOR THE PAYMENT OF DAMAGES. ALL RIGHTS RESERVED IN THE EVENT OF THE GRANT OF A PATENT, UTILITY MODEL OR DESIGN.

	DATE	NAME	DOCUMENT NO.	
DFTR.	16.05.2018	RAEDLINGER	SED 5143085 001 01	
CHKD.	16.05.2018	HAUER	CHANGE NO.	SCALE 1:10
STAND.	16.05.2018	PRODASTSCHUK	1087395	

DIMENSION IN mm EXCEPT AS NOTED

ON-LOAD TAP-CHANGER VACUTAP® VR
VRS/M I 701 – 72,5...420 kV – B/C/D/DE
DIMENSION DRAWING

SERIAL NUMBER

MATERIAL NUMBER 100178581E

SHEET 2/2

© MASCHINENFABRIK REINHAUSEN GMBH 2016
THE REPRODUCTION, DISTRIBUTION AND UTILIZATION OF THIS DOCUMENT AS WELL AS THE COMMUNICATION OF ITS CONTENTS TO OTHERS WITHOUT EXPRESS AUTHORIZATION IS PROHIBITED. OFFENDERS WILL BE HELD LIABLE FOR THE PAYMENT OF DAMAGES. ALL RIGHTS RESERVED IN THE EVENT OF THE GRANT OF A PATENT, UTILITY MODEL OR DESIGN.

WITHOUT CHANGE-OVER SELECTOR	0

WITH REVERSING CHANGE-OVER SELECTOR	W

WITH COARSE CHANGE-OVER SELECTOR	G

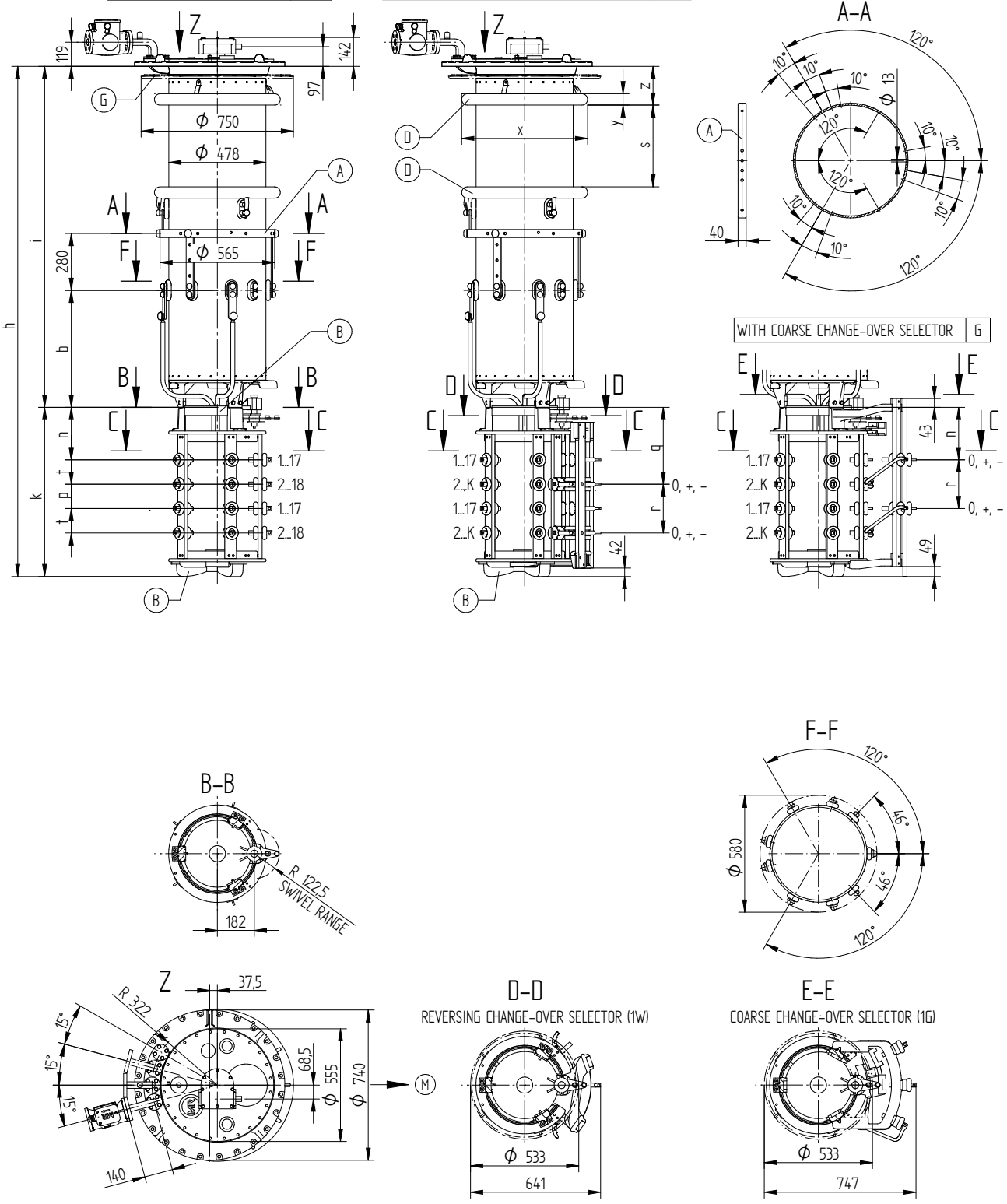

FOR THE TYPE OF OLTC-HEAD REFER TO THE ORDER-SPECIFIC DRAWING OF THE OLTC-HEAD AND DRIVE SHAFTS

(M) – DRIVE SIDE OF SELECTOR
(A) – ON-LOAD TAP-CHANGER CURRENT TAKE-OFF TERMINAL
(B) – IS CONNECTED TO POTENTIAL OF (A)
(D) – SHIELDING RINGS FOR UM OF 170 kV OR GREATER
(G) – SUPPORTING FLANGE FOR THE BELL-TYPE TANK INSTALLATION IS OPTIONAL

– THE DETAILED CONNECTION DIAGRAM IS BINDING FOR THE DESIGNATION OF THE CONNECTION CONTACTS AND PHASES
– C-C: REFER TO 898013
– D-D AND E-E: TYPE WITH CONNECTING LEAD 3W/3G REFER TO 723590

	DATE	NAME	DOCUMENT NO.	
DFTR.	20.10.2016	BUTERUS	SED 5144502 001 00	
CHKD.	26.10.2016	WREDE	CHANGE NO.	SCALE
STAND.	26.10.2016	PRODASTSCHUK	1077332	-

DIMENSION IN mm EXCEPT AS NOTED

ON-LOAD TAP-CHANGER VACUTAP® VR
VR S/M II 702 – 72,5...362 kV – B/C/D/DE
DIMENSION DRAWING

SERIAL NUMBER –
MATERIAL NUMBER 100178610E
SHEET 1/2

VACUTAP® VRS

SELECTOR SIZE		B						C						D/DE					
Um [kV]		72,5	123	170	245	300	362	72,5	123	170	245	300	362	72,5	123	170	245	300	362
DIMENSIONS [mm]	h	1876	2006	2136	2236	2388	2491	2001	2131	2261	2361	2513	2616	2326	2456	2586	2686	2838	2941
	i	1168	1298	1428	1528	1680	1783	1168	1298	1428	1528	1680	1783	1168	1298	1428	1528	1680	1783
	b	425						425						425					
	s	–	–	302	402	554	573	–	–	302	402	554	573	–	–	302	402	554	573
	z	–	–	191	191	191	228	–	–	191	191	191	228	–	–	191	191	191	228
	x	–	–	ϕ 620	ϕ 620	ϕ 620	ϕ 695	–	–	ϕ 620	ϕ 620	ϕ 620	ϕ 695	–	–	ϕ 620	ϕ 620	ϕ 620	ϕ 695
	y	–	–	ϕ 56	ϕ 56	ϕ 56	ϕ100	–	–	ϕ 56	ϕ 56	ϕ 56	ϕ100	–	–	ϕ 56	ϕ 56	ϕ 56	ϕ100
	k	708						833						1158					
	n	233						258						323					
	t	95						120						185					
	p	95						120						185					
	r	190						240						370					
	q	328						378						508					
OIL CONTENT [dm³]		155	175	195	215	235	255	155	175	195	215	235	255	155	175	195	215	235	255
DISPLACEMENT [dm³]		261	281	311	331	361	401	261	281	311	331	361	401	264	284	314	334	364	404
MAX. WEIGHT [kg]		373	379	392	395	401	408	384	390	403	406	412	419	395	401	414	417	423	430

VACUTAP® VRM

SELECTOR SIZE		B						C						D/DE					
Um [kV]		72,5	123	170	245	300	362	72,5	123	170	245	300	362	72,5	123	170	245	300	362
DIMENSIONS [mm]	h	2028	2158	2288	2388	2540	2643	2153	2283	2413	2513	2665	2768	2478	2608	2738	2838	2990	3093
	i	1320	1450	1580	1680	1832	1935	1320	1450	1580	1680	1832	1935	1320	1450	1580	1680	1832	1935
	b	576						576						576					
	s	–	–	302	402	554	573	–	–	302	402	554	573	–	–	302	402	554	573
	z	–	–	191	191	191	228	–	–	191	191	191	228	–	–	191	191	191	228
	x	–	–	ϕ 620	ϕ 620	ϕ 620	ϕ 695	–	–	ϕ 620	ϕ 620	ϕ 620	ϕ 695	–	–	ϕ 620	ϕ 620	ϕ 620	ϕ 695
	y	–	–	ϕ 56	ϕ 56	ϕ 56	ϕ100	–	–	ϕ 56	ϕ 56	ϕ 56	ϕ100	–	–	ϕ 56	ϕ 56	ϕ 56	ϕ100
	k	708						833						1158					
	n	233						258						323					
	t	95						120						185					
	p	95						120						185					
	r	190						240						370					
	q	328						378						508					
OIL CONTENT [dm³]		175	195	225	240	265	280	175	195	225	240	265	280	175	195	225	240	265	280
DISPLACEMENT [dm³]		281	311	341	361	391	431	281	311	341	361	391	431	284	314	344	364	394	434
MAX. WEIGHT [kg]		389	395	407	411	417	423	400	406	418	422	428	434	411	417	429	433	439	445

© MASCHINENFABRIK REINHAUSEN GMBH 2016
THE REPRODUCTION, DISTRIBUTION AND UTILIZATION OF THIS DOCUMENT AS WELL AS THE COMMUNICATION OF ITS CONTENTS TO OTHERS WITHOUT EXPRESS AUTHORIZATION IS PROHIBITED. OFFENDERS WILL BE HELD LIABLE FOR THE PAYMENT OF DAMAGES. ALL RIGHTS RESERVED IN THE EVENT OF THE GRANT OF A PATENT, UTILITY MODEL OR DESIGN.

	DATE	NAME	DOCUMENT NO.	
DFTR.	20.10.2016	BUTERUS	SED 5144502 001 00	
CHKD.	26.10.2016	WREDE	CHANGE NO.	SCALE
STAND.	26.10.2016	PRODASTSCHUK	1077332	-

DIMENSION IN mm EXCEPT AS NOTED

ON-LOAD TAP-CHANGER VACUTAP® VR
VR S/M II 702 – 72,5...362 kV – B/C/D/DE
DIMENSION DRAWING

SERIAL NUMBER
–

MATERIAL NUMBER
100178610E

SHEET
2/2

© MASCHINENFABRIK REINHAUSEN GMBH 2016
THE REPRODUCTION, DISTRIBUTION AND UTILIZATION OF THIS DOCUMENT AS WELL AS THE COMMUNICATION OF ITS CONTENTS TO OTHERS WITHOUT EXPRESS AUTHORIZATION IS PROHIBITED. OFFENDERS WILL BE HELD LIABLE FOR THE PAYMENT OF DAMAGES. ALL RIGHTS RESERVED IN THE EVENT OF THE GRANT OF A PATENT, UTILITY MODEL OR DESIGN.

WITHOUT CHANGE-OVER SELECTOR	0

WITH REVERSING CHANGE-OVER SELECTOR	W

WITH COARSE CHANGE-OVER SELECTOR	G

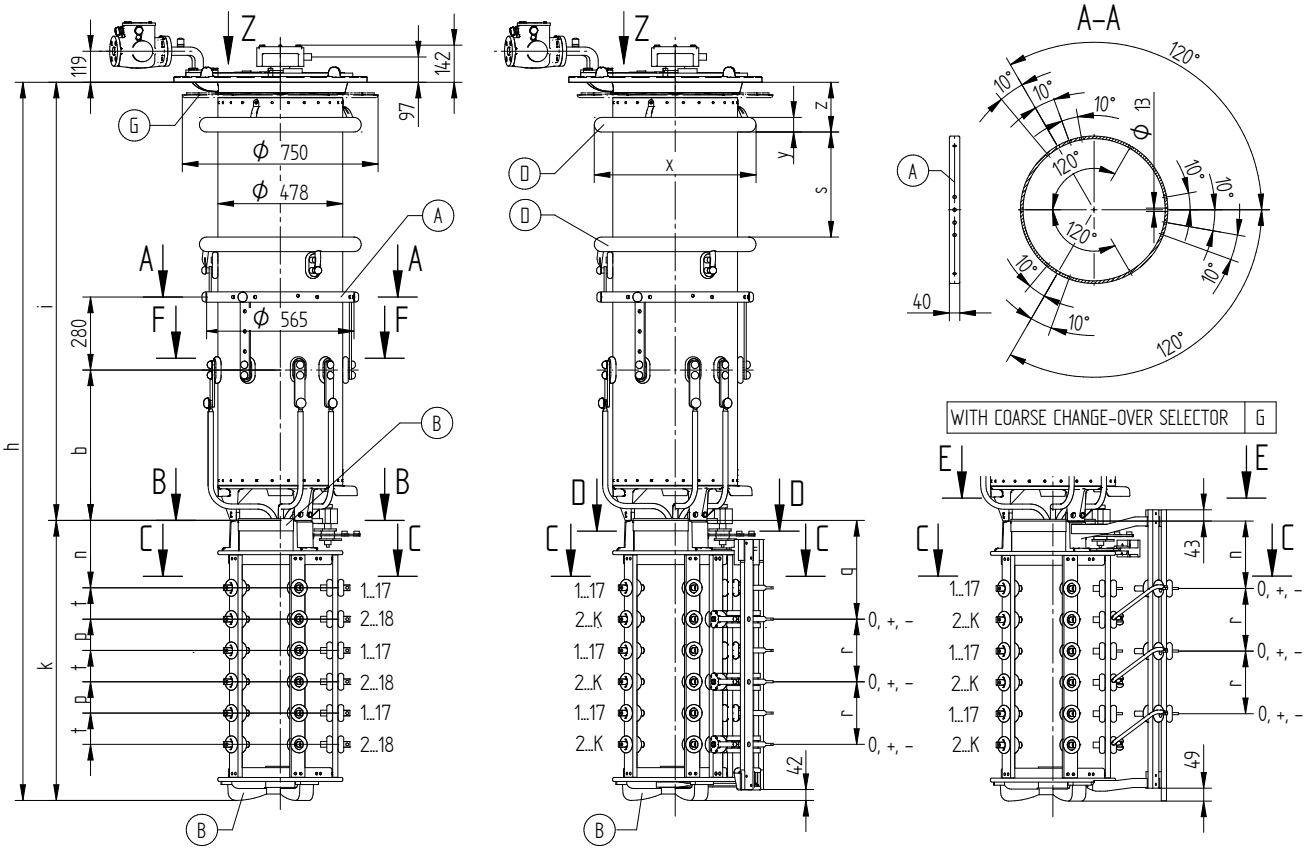

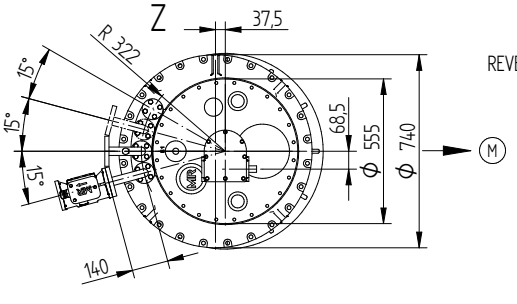

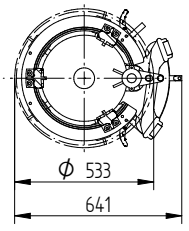

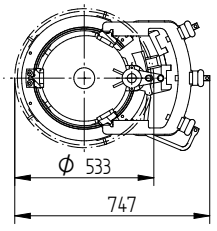

FOR THE TYPE OF OLTC-HEAD REFER TO THE ORDER-SPECIFIC DRAWING OF THE OLTC-HEAD AND DRIVE SHAFTS

(M) – DRIVE SIDE OF SELECTOR
(A) – ON-LOAD TAP-CHANGER CURRENT TAKE-OFF TERMINAL
(B) – IS CONNECTED TO POTENTIAL OF (A)
(D) – SHIELDING RINGS FOR UM OF 170 kV OR GREATER
(G) – SUPPORTING FLANGE FOR THE BELL-TYPE TANK INSTALLATION IS OPTIONAL

– THE DETAILED CONNECTION DIAGRAM IS BINDING FOR THE DESIGNATION OF THE CONNECTION CONTACTS AND PHASES
– C-C: REFER TO 898013
– D-D AND E-E: TYPE WITH CONNECTING LEAD 3W/3G REFER TO 723590

	DATE	NAME	DOCUMENT NO.	
DFTR.	08.12.2016	BUTERUS	SED 5152449 001 01	
CHKD.	09.12.2016	WREDE	CHANGE NO.	SCALE
STAND.	09.12.2016	KLEYN	1077332	-

DIMENSION IN mm EXCEPT AS NOTED

ON-LOAD TAP-CHANGER VACUTAP® VR
VR S/M III 700 – 72,5...245 kV – B/C/D/DE
DIMENSION DRAWING

SERIAL NUMBER –
MATERIAL NUMBER 100178660E
SHEET 1/2
A1

VACUTAP® VRS

SELECTOR SIZE		B				C				D/DE			
Um [kV]		72,5	123	170	245	72,5	123	170	245	72,5	123	170	245
DIMENSIONS [mm]	h	2066	2196	2326	2426	2241	2371	2501	2601	2696	2833	2956	3056
	i	1168	1298	1428	1528	1168	1298	1428	1528	1168	1298	1428	1528
	b	425				425				425			
	s	–	–	302	402	–	–	302	402	–	–	302	402
	z	–	–	191	191	–	–	191	191	–	–	191	191
	x	–	–	Ø 620	Ø 620	–	–	Ø 620	Ø 620	–	–	Ø 620	Ø 620
	y	–	–	Ø 56	Ø 56	–	–	Ø 56	Ø 56	–	–	Ø 56	Ø 56
	k	898				1073				1528			
	n	233				258				323			
	t	95				120				185			
	p	95				120				185			
	r	190				240				370			
	q	328				378				508			
OIL CONTENT [dm³]		150	170	190	210	150	170	190	210	150	170	190	210
DISPLACEMENT [dm³]		264	284	314	334	264	284	314	334	272	292	322	342
MAX. WEIGHT [kg]		437	443	455	459	447	453	465	469	464	470	482	486

VACUTAP® VRM

SELECTOR SIZE		B				C				D/DE			
Um [kV]		72,5	123	170	245	72,5	123	170	245	72,5	123	170	245
DIMENSIONS [mm]	h	2218	2348	2478	2578	2393	2523	2653	2753	2848	2978	3108	3208
	i	1320	1450	1580	1680	1320	1450	1580	1680	1320	1450	1580	1680
	b	576				576				576			
	s	–	–	302	402	–	–	302	402	–	–	302	402
	z	–	–	191	191	–	–	191	191	–	–	191	191
	x	–	–	Ø 620	Ø 620	–	–	Ø 620	Ø 620	–	–	Ø 620	Ø 620
	y	–	–	Ø 56	Ø 56	–	–	Ø 56	Ø 56	–	–	Ø 56	Ø 56
	k	898				1073				1528			
	n	233				258				323			
	t	95				120				185			
	p	95				120				185			
	r	190				240				370			
	q	328				378				508			
OIL CONTENT [dm³]		170	190	220	235	170	190	220	235	170	190	220	235
DISPLACEMENT [dm³]		284	314	344	364	284	314	344	364	292	322	352	372
MAX. WEIGHT [kg]		457	464	476	480	467	474	486	490	484	491	503	507

© MASCHINENFABRIK REINHAUSEN GMBH 2016
THE REPRODUCTION, DISTRIBUTION AND UTILIZATION OF THIS DOCUMENT AS WELL AS THE COMMUNICATION OF ITS CONTENTS TO OTHERS WITHOUT EXPRESS AUTHORIZATION IS PROHIBITED. OFFENDERS WILL BE HELD LIABLE FOR THE PAYMENT OF DAMAGES. ALL RIGHTS RESERVED IN THE EVENT OF THE GRANT OF A PATENT, UTILITY MODEL OR DESIGN.

	DATE	NAME	DOCUMENT NO.
DFTR.	08.12.2016	BUTERUS	SED 5152449 001 01
CHKD.	09.12.2016	WREDE	CHANGE NO. / SCALE
STAND.	09.12.2016	KLEYN	1077332 / -

DIMENSION IN mm EXCEPT AS NOTED

ON-LOAD TAP-CHANGER VACUTAP® VR
VR S/M III 700 – 72,5...245 kV – B/C/D/DE
DIMENSION DRAWING

SERIAL NUMBER –

MATERIAL NUMBER 100178660E

SHEET 2/2

A1

© MASCHINENFABRIK REINHAUSEN GMBH 2018
Weitergabe sowie Vervielfältigung dieses Dokuments, Verwertung und Mitteilung seines Inhaltes sind verboten, soweit nicht ausdrücklich gestattet.
Zuwiderhandlungen verpflichten zu Schadenersatz. Alle Rechte für den Fall der Patent-, Gebrauchsmuster- oder Designeintragung vorbehalten.

WITHOUT CHANGE-OVER SELECTOR | 0

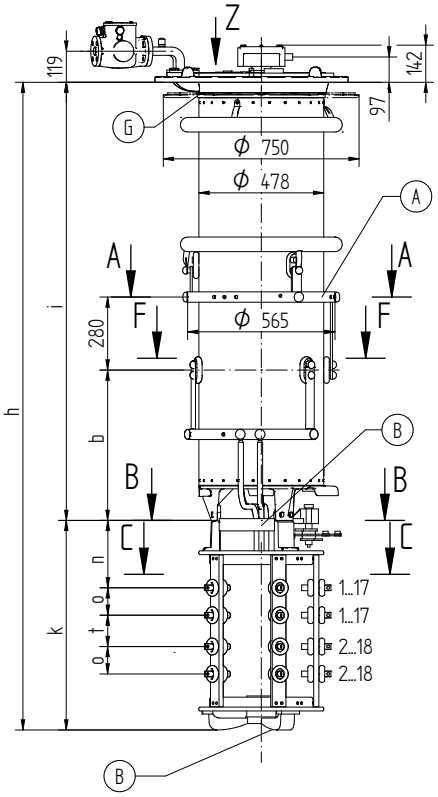

WITH REVERSING CHANGE-OVER SELECTOR | W

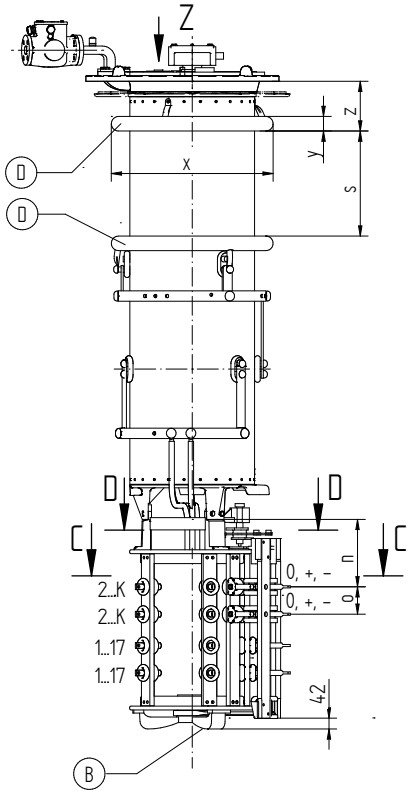

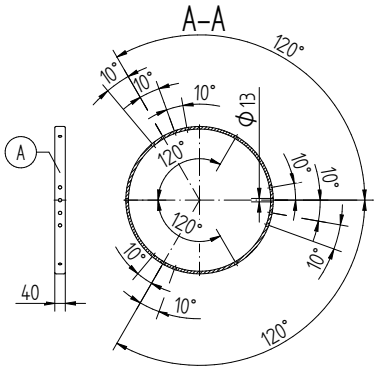

WITH COARSE CHANGE-OVER SELECTOR | G

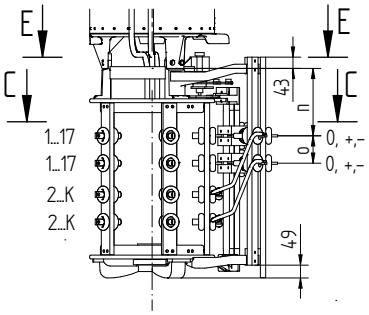

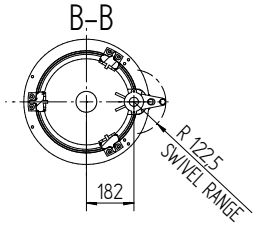

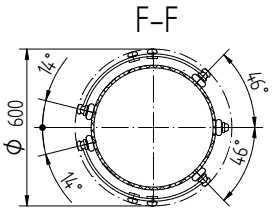

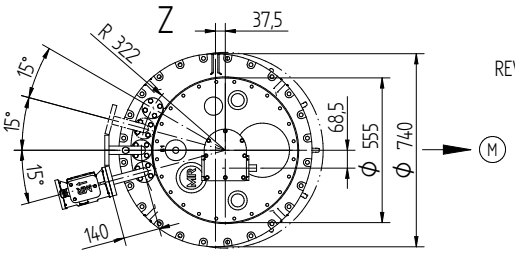

FOR THE TYPE OF THE OLTC-HEAD REFER TO THE ORDER-SPECIFIC DRAWING OF THE OLTC-HEAD AND DRIVE SHAFTS

D-D
REVERSING CHANGE-OVER SELECTOR (1W)

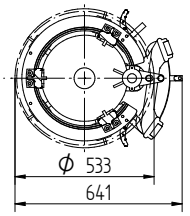

E-E
COARSE CHANGE-OVER SELECTOR (1G)

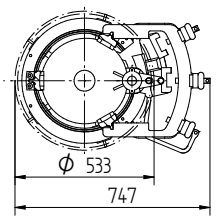

(M) – DRIVE SIDE OF SELECTOR
(A) – ON-LOAD TAP-CHANGER CURRENT TAKE-OFF TERMINAL
(B) – IS CONNECTED TO POTENTIAL OF (A)
(D) – SHIELDING RINGS FOR UM OF 170 kV OR GREATER
(G) – SUPPORTING FLANGE FOR THE BELL-TYPE TANK INSTALLATION IS OPTIONAL

– THE DETAILED CONNECTION DIAGRAM IS BINDING FOR THE DESIGNATION OF THE CONNECTION CONTACTS AND PHASES
– C-C: REFER TO 10018046
– D-D AND E-E: TYPE WITH CONNECTING LEAD 3W/3G REFER TO 723590
– CONNECTING OF PARALLEL SELECTOR PLANES REFER TO 10117014

	Datum	Name	Dokumentnummer	
Gez.	16.05.2018	RAEDLINGER	SED 6017860 001 01	
Gepr.	16.05.2018	HAUER	Änderungsnummer	Maßstab
Norm.	16.05.2018	PRODASTSCHUK	1087395	1:10

Maßangaben in mm, soweit nicht anders angegeben

ON-LOAD TAP-CHANGER VACUTAP® VR
VRS/VRM I 1001 – 72,5...420 kV – B/C/D/DE
DIMENSION DRAWING

Serialnummer

Materialnummer 101169840E

Blatt 1/2

VACUTAP® VRS

SELECTOR SIZE		B							C							D/DE						
Um [kV]		72,5	123	170	245	300	362	420	72,5	123	170	245	300	362	420	72,5	123	170	245	300	362	420
DIMENSIONS [mm]	h	1896	2026	2156	2256	2408	2511	2630	1971	2101	2231	2331	2483	2586	2705	2166	2296	2426	2526	2678	2781	2900
	i	1168	1298	1428	1528	1680	1783	1902	1168	1298	1428	1528	1680	1783	1902	1168	1298	1428	1528	1680	1783	1902
	b	425							425							425						
	s	–	–	302	402	554	573	692	–	–	302	402	554	573	692	–	–	302	402	554	573	692
	z	–	–	191	191	191	228	228	–	–	191	191	191	228	228	–	–	191	191	191	228	228
	x	–	–	ϕ 620	ϕ 620	ϕ 620	ϕ 695	ϕ 695	–	–	ϕ 620	ϕ 620	ϕ 620	ϕ 695	ϕ 695	–	–	ϕ 620	ϕ 620	ϕ 620	ϕ 695	ϕ 695
	y	–	–	ϕ 56	ϕ 56	ϕ 56	ϕ100	ϕ100	–	–	ϕ 56	ϕ 56	ϕ 56	ϕ100	ϕ100	–	–	ϕ 56	ϕ 56	ϕ 56	ϕ100	ϕ100
	k	728							803							998						
	n	233							258							323						
	o	105							105							105						
	t	95							120							185						
OIL VOLUME [dm³]		160	180	200	220	240	260	280	160	180	200	220	240	260	280	160	180	200	220	240	260	280
DISPLACEMENT [dm³]		261	281	311	331	361	401	421	261	281	311	331	361	401	421	264	284	314	334	364	404	424
MAX. WEIGHT [kg]		322	328	341	344	350	357	362	332	338	351	354	360	367	372	348	354	367	370	376	383	388

VACUTAP® VRM

SELECTOR SIZE		B							C							D/DE						
Um [kV]		72,5	123	170	245	300	362	420	72,5	123	170	245	300	362	420	72,5	123	170	245	300	362	420
DIMENSIONS [mm]	h	2048	2178	2308	2408	2560	2663	2782	2123	2253	2383	2483	2635	2738	2857	2318	2448	2578	2678	2830	2933	3052
	i	1320	1450	1580	1680	1832	1935	2054	1320	1450	1580	1680	1832	1935	2054	1320	1450	1580	1680	1832	1935	2054
	b	576							576							576						
	s	–	–	302	402	554	573	692	–	–	302	402	554	573	692	–	–	302	402	554	573	692
	z	–	–	191	191	191	228	228	–	–	191	191	191	228	228	–	–	191	191	191	228	228
	x	–	–	ϕ 620	ϕ 620	ϕ 620	ϕ 695	ϕ 695	–	–	ϕ 620	ϕ 620	ϕ 620	ϕ 695	ϕ 695	–	–	ϕ 620	ϕ 620	ϕ 620	ϕ 695	ϕ 695
	y	–	–	ϕ 56	ϕ 56	ϕ 56	ϕ100	ϕ100	–	–	ϕ 56	ϕ 56	ϕ 56	ϕ100	ϕ100	–	–	ϕ 56	ϕ 56	ϕ 56	ϕ100	ϕ100
	k	728							803							998						
	n	233							258							323						
	o	105							105							105						
	t	95							120							185						
OIL VOLUME [dm³]		180	200	230	245	270	285	305	180	200	230	245	270	285	305	180	200	230	245	270	285	305
DISPLACEMENT [dm³]		281	311	341	361	391	431	451	281	311	341	361	391	431	451	284	314	344	364	394	434	454
MAX. WEIGHT [kg]		331	337	350	354	359	366	371	341	347	360	364	369	376	381	357	363	376	380	385	392	397

© MASCHINENFABRIK REINHAUSEN GMBH 2018
Weitergabe sowie Vervielfältigung dieses Dokuments, Verwertung und Mitteilung seines Inhaltes sind verboten, soweit nicht ausdrücklich gestattet.
Zuwiderhandlungen verpflichten zu Schadenersatz. Alle Rechte für den Fall der Patent-, Gebrauchsmuster- oder Designeintragung vorbehalten.

	Datum	Name	Dokumentnummer	
Gez.	16.05.2018	RAEDLINGER	SED 6017860 001 01	
Gepr.	16.05.2018	HAUER	Änderungsnummer	Maßstab
Norm.	16.05.2018	PRODASTSCHUK	1087395	1:10

Maßangaben in mm, soweit nicht anders angegeben

MR

ON-LOAD TAP-CHANGER VACUTAP® VR
VRS/VRM I 1001 – 72,5...420 kV – B/C/D/DE
DIMENSION DRAWING

Serialnummer

Materialnummer 101169840E

Blatt 2/2

© MASCHINENFABRIK REINHAUSEN GMBH 2018
Weitergabe sowie Vervielfältigung dieses Dokuments, Verwertung und Mitteilung seines Inhaltes sind verboten, soweit nicht ausdrücklich gestattet.
Zuwiderhandlungen verpflichten zu Schadenersatz. Alle Rechte für den Fall der Patent-, Gebrauchsmuster- oder Designeintragung vorbehalten.

	Datum	Name	Dokumentnummer	
Gez.	16.05.2018	RAEDLINGER	SED 6018611 001 01	
Gepr.	16.05.2018	HAUER	Änderungsnummer	Maßstab
Norm.	16.05.2018	PRODASTSCHUK	1087395	1:10

WITHOUT CHANGE-OVER SELECTOR | 0

WITH REVERSING CHANGE-OVER SELECTOR | W

WITH COARSE CHANGE-OVER SELECTOR | G

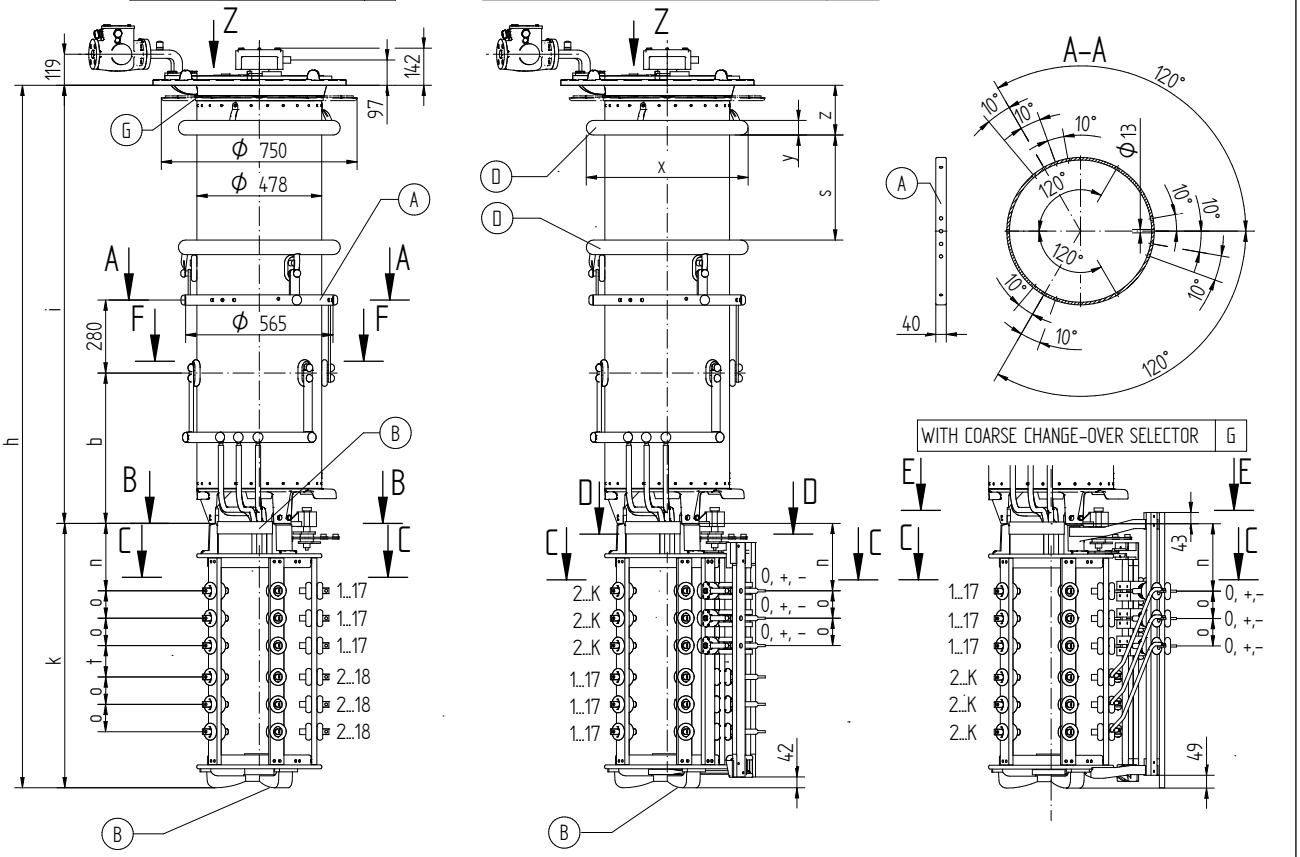

(M) – DRIVE SIDE OF SELECTOR
(A) – ON-LOAD TAP-CHANGER CURRENT TAKE-OFF TERMINAL
(B) – IS CONNECTED TO POTENTIAL OF (A)
(D) – SHIELDING RINGS FOR UM OF 170 kV OR GREATER
(G) – SUPPORTING FLANGE FOR THE BELL-TYPE TANK INSTALLATION IS OPTIONAL

– THE DETAILED CONNECTION DIAGRAM IS BINDING FOR THE DESIGNATION OF THE CONNECTION CONTACTS AND PHASES
– C-C: REFER TO 10018046
– D-D AND E-E: TYPE WITH CONNECTING LEAD 3W/3G REFER TO 723590
– CONNECTING OF PARALLEL SELECTOR PLANES REFER TO 10117014

Maßangaben in mm, soweit nicht anders angegeben

ON-LOAD TAP-CHANGER VACUTAP® VR
VRS/VRM I 1301 – 72,5...420 kV – B/C/D/DE
DIMENSION DRAWING

Serialnummer

Materialnummer 101169860E

Blatt 1/2

VACUTAP® VRS

SELECTOR SIZE		B							C							D/DE						
Um [kV]		72,5	123	170	245	300	362	420	72,5	123	170	245	300	362	420	72,5	123	170	245	300	362	420
DIMENSIONS [mm]	h	2106	2236	2366	2466	2618	2721	2840	2181	2311	2441	2541	2693	2796	2915	2376	2506	2636	2736	2888	2991	3110
	i	1168	1298	1428	1528	1680	1783	1902	1168	1298	1428	1528	1680	1783	1902	1168	1298	1428	1528	1680	1783	1902
	b	425							425							425						
	s	–	–	302	402	554	573	692	–	–	302	402	554	573	692	–	–	302	402	554	573	692
	z	–	–	191	191	191	228	228	–	–	191	191	191	228	228	–	–	191	191	191	228	228
	x	–	–	Φ 620	Φ 620	Φ 620	Φ 695	Φ 695	–	–	Φ 620	Φ 620	Φ 620	Φ 695	Φ 695	–	–	Φ 620	Φ 620	Φ 620	Φ 695	Φ 695
	y	–	–	Φ 56	Φ 56	Φ 56	Φ100	Φ100	–	–	Φ 56	Φ 56	Φ 56	Φ100	Φ100	–	–	Φ 56	Φ 56	Φ 56	Φ100	Φ100
	k	938							1013							1208						
	n	233							258							323						
	o	105							105							105						
	t	95							120							185						
OIL VOLUME [dm³]		160	180	200	220	240	260	280	160	180	200	220	240	260	280	160	180	200	220	240	260	280
DISPLACEMENT [dm³]		265	285	315	335	365	405	425	265	285	315	335	365	405	425	269	289	319	339	369	409	429
MAX. WEIGHT [kg]		337	343	356	359	365	372	377	347	353	366	369	375	382	387	363	369	382	385	391	398	403

VACUTAP® VRM

SELECTOR SIZE		B							C							D/DE						
Um [kV]		72,5	123	170	245	300	362	420	72,5	123	170	245	300	362	420	72,5	123	170	245	300	362	420
DIMENSIONS [mm]	h	2258	2388	2518	2618	2770	2873	2992	2333	2463	2593	2693	2845	2948	3067	2528	2658	2788	2888	3040	3143	3262
	i	1320	1450	1580	1680	1832	1935	2054	1320	1450	1580	1680	1832	1935	2054	1320	1450	1580	1680	1832	1935	2054
	b	576							576							576						
	s	–	–	302	402	554	573	692	–	–	302	402	554	573	692	–	–	302	402	554	573	692
	z	–	–	191	191	191	228	228	–	–	191	191	191	228	228	–	–	191	191	191	228	228
	x	–	–	Φ 620	Φ 620	Φ 620	Φ 695	Φ 695	–	–	Φ 620	Φ 620	Φ 620	Φ 695	Φ 695	–	–	Φ 620	Φ 620	Φ 620	Φ 695	Φ 695
	y	–	–	Φ 56	Φ 56	Φ 56	Φ100	Φ100	–	–	Φ 56	Φ 56	Φ 56	Φ100	Φ100	–	–	Φ 56	Φ 56	Φ 56	Φ100	Φ100
	k	938							1013							1208						
	n	233							258							323						
	o	105							105							105						
	t	95							120							185						
OIL VOLUME [dm³]		180	200	230	245	270	285	305	180	200	230	245	270	285	305	180	200	230	245	270	285	305
DISPLACEMENT [dm³]		285	315	345	365	395	435	455	285	315	345	365	395	435	455	289	319	349	369	399	439	459
MAX. WEIGHT [kg]		346	352	365	369	374	381	386	356	362	375	379	384	391	396	372	378	391	395	400	407	412

© MASCHINENFABRIK REINHAUSEN GMBH 2018
Weitergabe sowie Vervielfältigung dieses Dokuments, Verwertung und Mitteilung seines Inhaltes sind verboten, soweit nicht ausdrücklich gestattet.
Zuwiderhandlungen verpflichten zu Schadenersatz. Alle Rechte für den Fall der Patent-, Gebrauchsmuster- oder Designeintragung vorbehalten.

	Datum	Name	Dokumentnummer	
Gez.	16.05.2018	RAEDLINGER	SED 6018611 001 01	
Gepr.	16.05.2018	HAUER	Änderungsnummer	Maßstab
Norm.	16.05.2018	PRODASTSCHUK	1087395	1:10

Maßangaben in mm, soweit nicht anders angegeben

ON-LOAD TAP-CHANGER VACUTAP® VR
VRS/VRM I 1301 – 72,5...420 kV – B/C/D/DE
DIMENSION DRAWING

Serialnummer

Materialnummer 101169860E

Blatt 2/2

© MASCHINENFABRIK REINHAUSEN GMBH 2018
THE REPRODUCTION, DISTRIBUTION AND UTILIZATION OF THIS DOCUMENT AS WELL AS THE COMMUNICATION OF ITS CONTENTS TO OTHERS WITHOUT EXPRESS AUTHORIZATION IS PROHIBITED. OFFENDERS WILL BE HELD LIABLE FOR THE PAYMENT OF DAMAGES. ALL RIGHTS RESERVED IN THE EVENT OF THE GRANT OF A PATENT, UTILITY MODEL OR DESIGN.

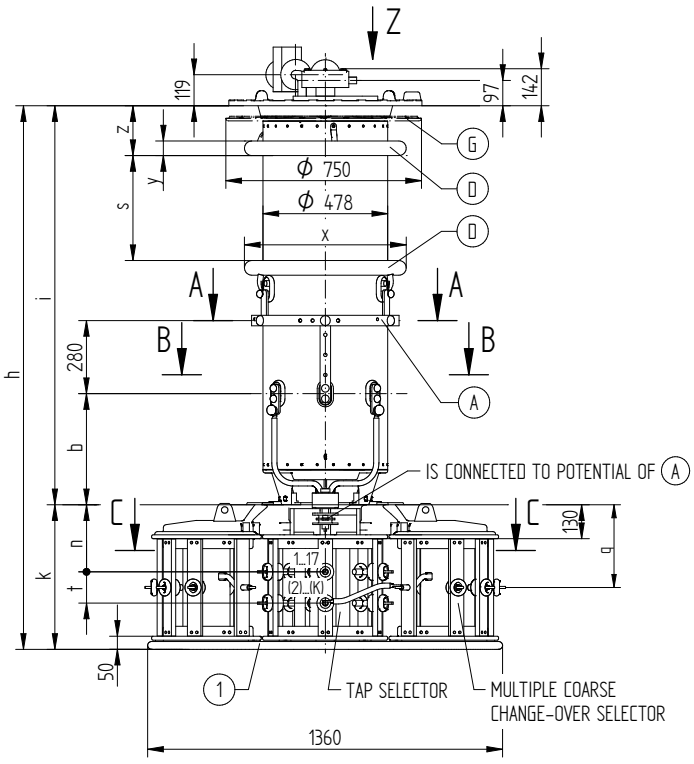

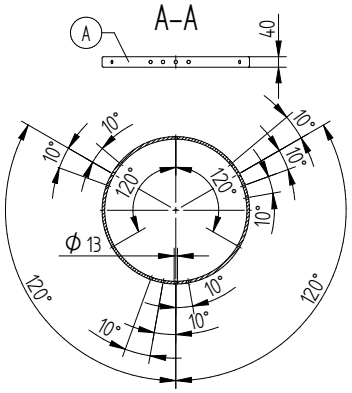

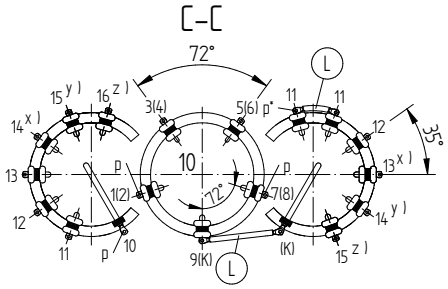

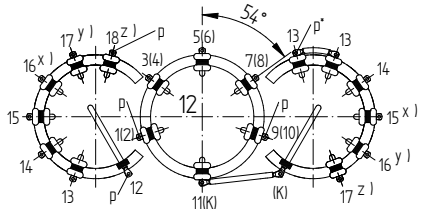

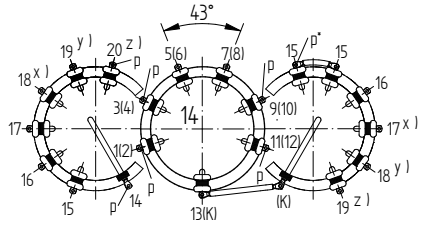

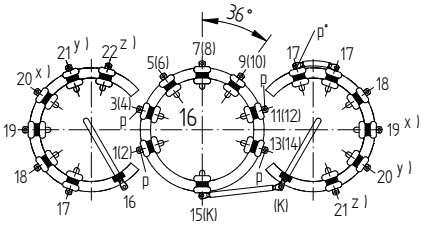

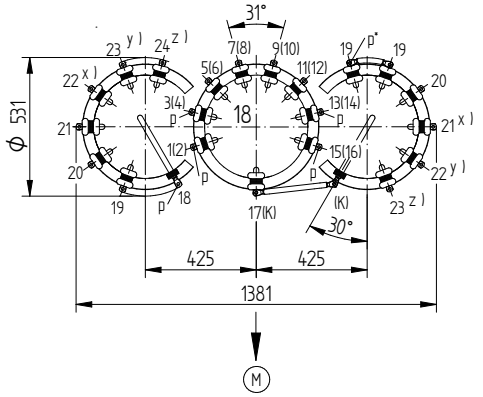

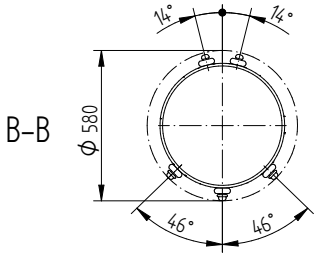

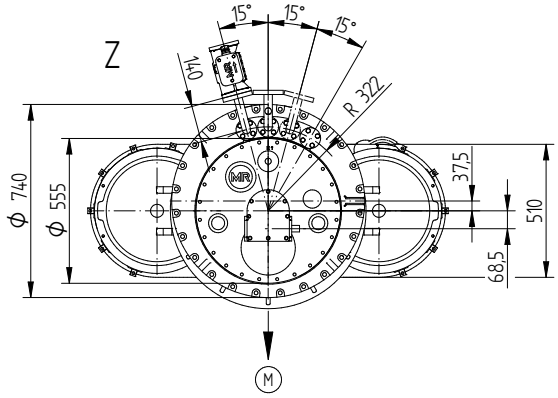

FOR THE TYPE OF OLTC-HEAD REFER TO THE ORDER-SPECIFIC DRAWING OF THE OLTC-HEAD AND DRIVE SHAFTS

(M) – DRIVE SIDE OF SELECTOR
(A) – ON-LOAD TAP-CHANGER CURRENT TAKE-OFF TERMINAL
(D) – SHIELDING RINGS FOR UM OF 170 kV OR GREATER
(G) – SUPPORTING FLANGE FOR THE BELL-TYPE TANK INSTALLATION IS OPTIONAL

(1) – BOTTOM-MOST LIVE PARTS; THESE ARE CONNECTED TO THE POTENTIAL OF THE ASSOCIATED AND/OR WIRED CONNECTION CONTACT

– THE DETAILED CONNECTION DIAGRAM IS BINDING FOR THE DESIGNATION OF THE CONNECTION CONTACTS AND PHASES

ARRANGEMENT OF SELECTOR CONTACTS, 2–5 COARSE TAP CONNECTIONS

x) FOR 3 COARSE TAP CONNECTIONS
x) AND y) FOR 4 COARSE TAP CONNECTIONS
x), y) AND z) FOR 5 COARSE TAP CONNECTIONS

p = CONNECTION MIN. 3 MM PAPER INSULATED
p* = CONNECTION ALREADY 3 MM PAPER INSULATED BY MR

	DATE	NAME	DOCUMENT NO.	
DFTR.	19.04.2018	RAEDLINGER	SED 5550262 001 02	
CHKD.	25.04.2018	HAUER	CHANGE NO.	SCALE
STAND.	25.04.2018	PRODASTSCHUK	1087395	1:10

DIMENSION IN mm EXCEPT AS NOTED

ON-LOAD TAP-CHANGER VACUTAP® VR
VRS/VRM I 701 –72,5...300kV– B/C/D WITH MULTIPLE COARSE COS
DIMENSION DRAWING

SERIAL NUMBER

MATERIAL NUMBER 100208541E

SHEET 1/2

VACUTAP® VRS I 701

SELECTOR SIZE		B					C					D				
Um [kV]		72,5	123	170	245	300	72,5	123	170	245	300	72,5	123	170	245	300
DIMENSIONS [mm]	h	1648	1778	1908	2008	2160	1723	1853	1983	2083	2235	1918	2048	2178	2278	2430
	i	1168	1298	1428	1528	1680	1168	1298	1428	1528	1680	1168	1298	1428	1528	1680
	b	425					425					425				
	s	–	–	302	402	554	–	–	302	402	554	–	–	302	402	554
	z	–	–	191	191	191	–	–	191	191	191	–	–	191	191	191
	x	–	–	Φ 620	Φ 620	Φ 620	–	–	Ø 620	Ø 620	Ø 620	–	–	Ø 620	Ø 620	Ø 620
	y	–	–	Φ 56	Φ 56	Φ 56	–	–	Ø 56	Ø 56	Ø 56	–	–	Ø 56	Ø 56	Ø 56
	k	480					555					750				
	n	233					258					323				
	t	95					120					185				
	q	279,5					317					414,5				
OIL VOLUME [dm³]		160	180	200	220	240	160	180	200	220	240	160	180	200	220	240
DISPLACEMENT [dm³]		254	274	304	324	354	255	275	305	325	355	257	277	307	327	357
MAX. WEIGHT [kg]		402	408	421	424	430	412	418	431	434	440	422	428	441	444	450

VACUTAP® VRM I 701

SELECTOR SIZE		B					C					D				
Um [kV]		72,5	123	170	245	300	72,5	123	170	245	300	72,5	123	170	245	300
DIMENSIONS [mm]	h	1800	1930	2060	2160	2312	1875	2005	2135	2235	2387	2070	2200	2330	2430	2582
	i	1320	1450	1580	1680	1832	1320	1450	1580	1680	1832	1320	1450	1580	1680	1832
	b	576					576					576				
	s	–	–	302	402	554	–	–	302	402	554	–	–	302	402	554
	z	–	–	191	191	191	–	–	191	191	191	–	–	191	191	191
	x	–	–	Φ 620	Φ 620	Φ 620	–	–	Ø 620	Ø 620	Ø 620	–	–	Ø 620	Ø 620	Ø 620
	y	–	–	Φ 56	Φ 56	Φ 56	–	–	Ø 56	Ø 56	Ø 56	–	–	Ø 56	Ø 56	Ø 56
	k	480					555					750				
	n	233					258					323				
	t	95					120					185				
	q	279,5					317					414,5				
OIL VOLUME [dm³]		180	200	230	245	270	180	200	230	245	270	180	200	230	245	270
DISPLACEMENT [dm³]		284	304	334	354	384	285	305	335	355	385	287	307	337	357	387
MAX. WEIGHT [kg]		411	417	430	433	439	421	427	440	443	449	431	437	450	453	459

© MASCHINENFABRIK REINHAUSEN GMBH 2018
THE REPRODUCTION, DISTRIBUTION AND UTILIZATION OF THIS DOCUMENT AS WELL AS THE COMMUNICATION OF ITS CONTENTS TO OTHERS WITHOUT EXPRESS AUTHORIZATION IS PROHIBITED. OFFENDERS WILL BE HELD LIABLE FOR THE PAYMENT OF DAMAGES. ALL RIGHTS RESERVED IN THE EVENT OF THE GRANT OF A PATENT, UTILITY MODEL OR DESIGN.

	DATE	NAME	DOCUMENT NO.	
DFTR.	19.04.2018	RAEDLINGER	SED 5550262 001 02	
CHKD.	25.04.2018	HAUER	CHANGE NO.	SCALE 1:10
STAND.	25.04.2018	PRODASTSCHUK	1087395	

DIMENSION IN mm EXCEPT AS NOTED

ON-LOAD TAP-CHANGER VACUTAP® VR
VRS/VRM I 701 -72,5...300kV- B/C/D WITH MULTIPLE COARSE COS
DIMENSION DRAWING

SERIAL NUMBER

MATERIAL NUMBER 100208541E

© MASCHINENFABRIK REINHAUSEN GMBH 2018
THE REPRODUCTION, DISTRIBUTION AND UTILIZATION OF THIS DOCUMENT AS WELL AS THE COMMUNICATION OF ITS CONTENTS TO OTHERS WITHOUT EXPRESS AUTHORIZATION IS PROHIBITED. OFFENDERS WILL BE HELD LIABLE FOR THE PAYMENT OF DAMAGES. ALL RIGHTS RESERVED IN THE EVENT OF THE GRANT OF A PATENT, UTILITY MODEL OR DESIGN.

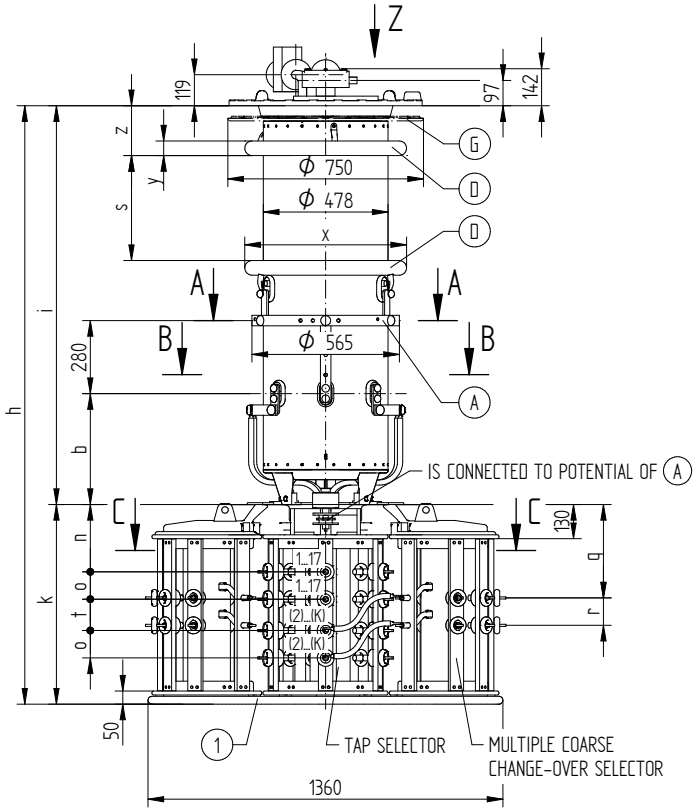

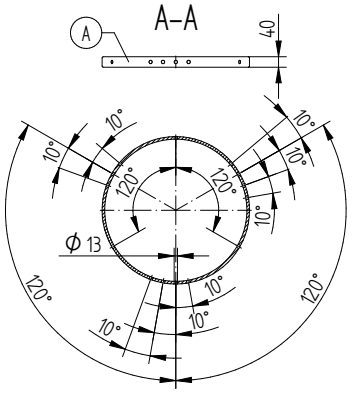

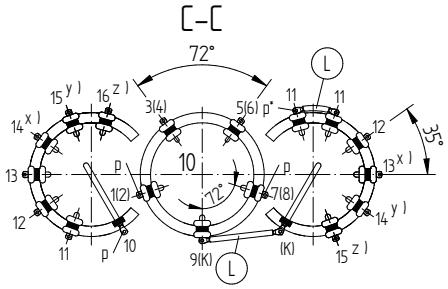

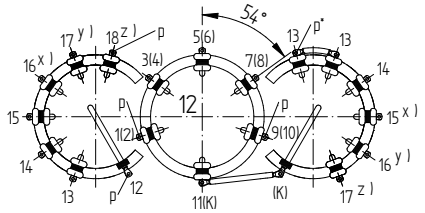

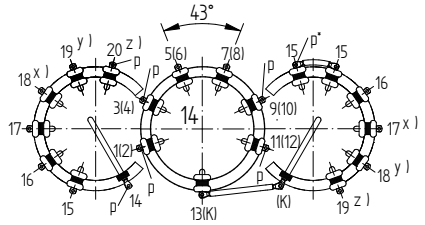

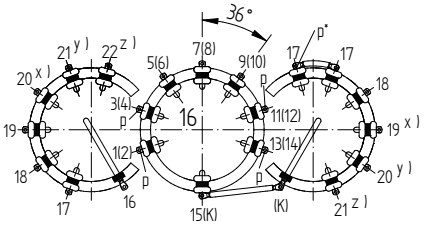

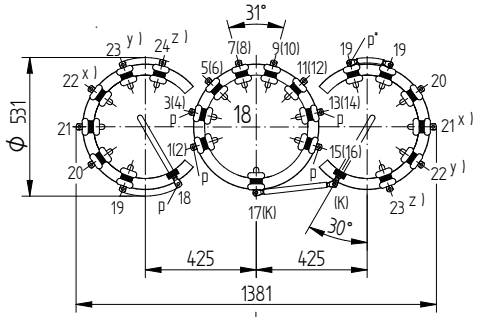

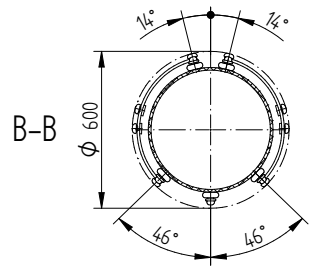

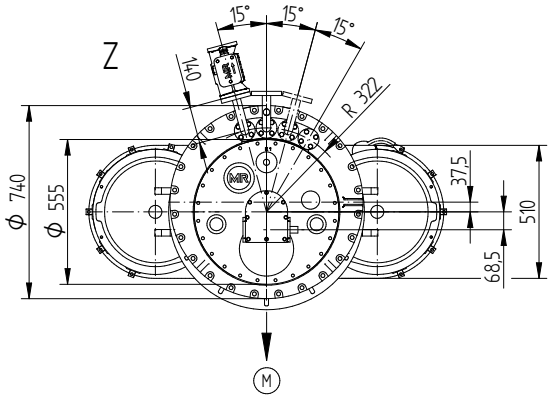

FOR THE TYPE OF OLTC-HEAD REFER TO THE ORDER-SPECIFIC DRAWING OF THE OLTC-HEAD AND DRIVE SHAFTS

(M) – DRIVE SIDE OF SELECTOR
(A) – ON-LOAD TAP-CHANGER CURRENT TAKE-OFF TERMINAL
(D) – SHIELDING RINGS FOR UM OF 170 kV OR GREATER
(G) – SUPPORTING FLANGE FOR THE BELL-TYPE TANK INSTALLATION IS OPTIONAL

(1) – BOTTOM-MOST LIVE PARTS; THESE ARE CONNECTED TO THE POTENTIAL OF THE ASSOCIATED AND/OR WIRED CONNECTION CONTACT

- THE DETAILED CONNECTION DIAGRAM IS BINDING FOR THE DESIGNATION OF THE CONNECTION CONTACTS AND PHASES
- CONNECTING OF PARALLEL SELECTOR PLANES REFER TO 10117014

ARRANGEMENT OF SELECTOR CONTACTS, 2-5 COARSE TAP CONNECTIONS

x) FOR 3 COARSE TAP CONNECTIONS
x) AND y) FOR 4 COARSE TAP CONNECTIONS
x), y) AND z) FOR 5 COARSE TAP CONNECTIONS

p = CONNECTION MIN. 3 MM PAPER INSULATED
p* = CONNECTION ALREADY 3 MM PAPER INSULATED BY MR

	DATE	NAME	DOCUMENT NO.	
DFTR.	19.04.2018	RAEDLINGER	SED 5550268 001 02	
CHKD.	25.04.2018	HAUER	CHANGE NO.	SCALE
STAND.	25.04.2018	PRODASTSCHUK	1087395	1:10

DIMENSION IN mm EXCEPT AS NOTED

ON-LOAD TAP-CHANGER VACUTAP® VR
VRS/VRM I 1001 -72,5...300kV-B/C/D WITH MULTIPLE COARSE COS DIMENSION DRAWING

SERIAL NUMBER

MATERIAL NUMBER 100208551E

SHEET 1/2

VACUTAP® VRS I 1001

SELECTOR SIZE		B					C					D				
Um [kV]		72,5	123	170	245	300	72,5	123	170	245	300	72,5	123	170	245	300
DIMENSIONS [mm]	h	1858	1988	2118	2218	2370	1933	2063	2193	2293	2445	2128	2258	2388	2488	2640
	i	1168	1298	1428	1528	1680	1168	1298	1428	1528	1680	1168	1298	1428	1528	1680
	b	425					425					425				
	s	–	–	302	402	554	–	–	302	402	554	–	–	302	402	554
	z	–	–	191	191	191	–	–	191	191	191	–	–	191	191	191
	x	–	–	Φ 620	Φ 620	Φ 620	–	–	Ø 620	Ø 620	Ø 620	–	–	Ø 620	Ø 620	Ø 620
	y	–	–	Φ 56	Φ 56	Φ 56	–	–	Ø 56	Ø 56	Ø 56	–	–	Ø 56	Ø 56	Ø 56
	k	690					765					960				
	n	233					258					323				
	o	105					105					105				
	t	95					120					185				
	r	105					105					105				
	q	319,5					357					454,5				
OIL VOLUME [dm³]		160	180	200	220	240	160	180	200	220	240	160	180	200	220	240
DISPLACEMENT [dm³]		265	285	315	335	365	267	287	317	337	367	270	290	320	340	370
MAX. WEIGHT [kg]		436	442	455	458	464	446	452	465	468	474	456	462	475	478	484

VACUTAP® VRM I 1001

SELECTOR SIZE		B					C					D				
Um [kV]		72,5	123	170	245	300	72,5	123	170	245	300	72,5	123	170	245	300
DIMENSIONS [mm]	h	2010	2140	2270	2370	2522	2085	2215	2345	2445	2597	2280	2410	2540	2640	2792
	i	1320	1450	1580	1680	1832	1320	1450	1580	1680	1832	1320	1450	1580	1680	1832
	b	576					576					576				
	s	–	–	302	402	554	–	–	302	402	554	–	–	302	402	554
	z	–	–	191	191	191	–	–	191	191	191	–	–	191	191	191
	x	–	–	Φ 620	Φ 620	Φ 620	–	–	Ø 620	Ø 620	Ø 620	–	–	Ø 620	Ø 620	Ø 620
	y	–	–	Φ 56	Φ 56	Φ 56	–	–	Ø 56	Ø 56	Ø 56	–	–	Ø 56	Ø 56	Ø 56
	k	690					765					960				
	n	233					258					323				
	o	105					105					105				
	t	95					120					185				
	r	105					105					105				
	q	319,5					357					454,5				
OIL VOLUME [dm³]		180	200	230	245	270	180	200	230	245	270	180	200	230	245	270
DISPLACEMENT [dm³]		295	315	345	365	395	297	317	347	367	397	300	320	350	370	400
MAX. WEIGHT [kg]		447	453	466	469	475	457	463	476	479	485	467	473	486	489	495

© MASCHINENFABRIK REINHAUSEN GMBH 2018
THE REPRODUCTION, DISTRIBUTION AND UTILIZATION OF THIS DOCUMENT AS WELL AS THE COMMUNICATION OF ITS CONTENTS TO OTHERS WITHOUT EXPRESS AUTHORIZATION IS PROHIBITED. OFFENDERS WILL BE HELD LIABLE FOR THE PAYMENT OF DAMAGES. ALL RIGHTS RESERVED IN THE EVENT OF THE GRANT OF A PATENT, UTILITY MODEL OR DESIGN.

	DATE	NAME	DOCUMENT NO.	
DFTR.	19.04.2018	RAEDLINGER	SED 5550268 001 02	
CHKD.	25.04.2018	HAUER	CHANGE NO.	SCALE
STAND.	25.04.2018	PRODASTSCHUK	1087395	1:10

DIMENSION IN mm EXCEPT AS NOTED

MR

ON-LOAD TAP-CHANGER VACUTAP® VR
VRS/VRM I 1001 -72,5...300kV-B/C/D WITH MULTIPLE COARSE COS
DIMENSION DRAWING

SERIAL NUMBER

MATERIAL NUMBER 100208551E

SHEET 2/2

© MASCHINENFABRIK REINHAUSEN GMBH 2018
THE REPRODUCTION, DISTRIBUTION AND UTILIZATION OF THIS DOCUMENT AS WELL AS THE COMMUNICATION OF ITS CONTENTS TO OTHERS WITHOUT EXPRESS AUTHORIZATION IS PROHIBITED. OFFENDERS WILL BE HELD LIABLE FOR THE PAYMENT OF DAMAGES. ALL RIGHTS RESERVED IN THE EVENT OF THE GRANT OF A PATENT, UTILITY MODEL OR DESIGN.

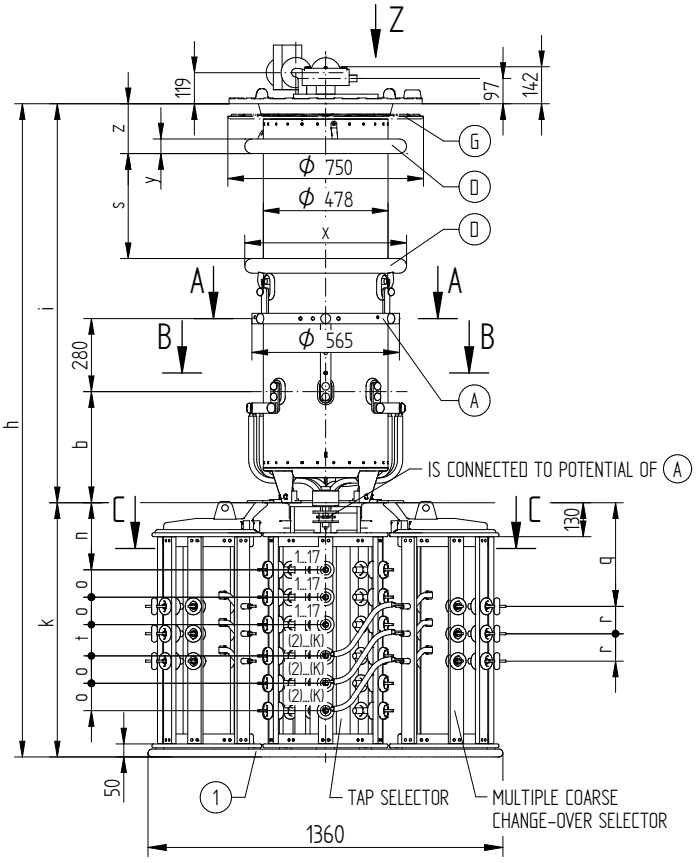

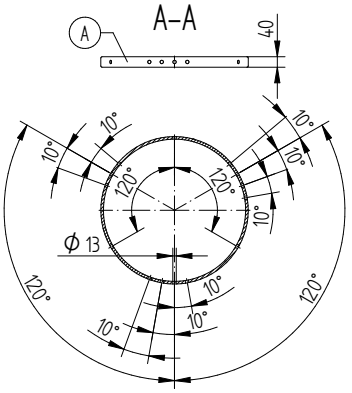

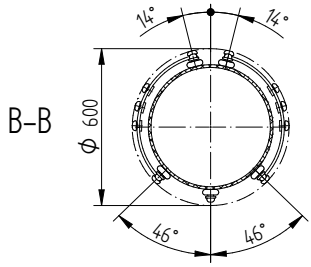

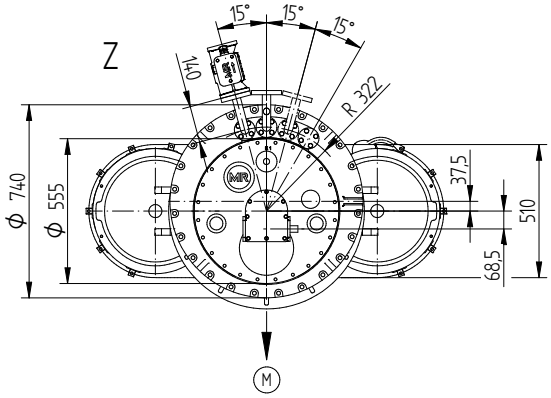

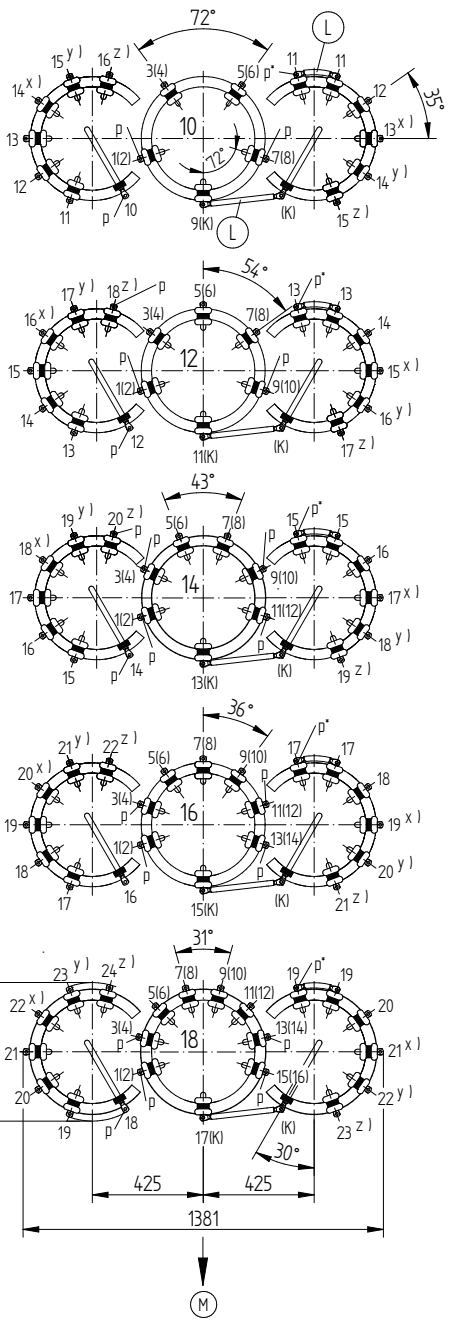

FOR THE TYPE OF OLTC-HEAD REFER TO THE ORDER-SPECIFIC DRAWING OF THE OLTC-HEAD AND DRIVE SHAFTS

(M) – DRIVE SIDE OF SELECTOR

(A) – ON-LOAD TAP-CHANGER CURRENT TAKE-OFF TERMINAL

(D) – SHIELDING RINGS FOR UM OF 170 kV OR GREATER

(G) – SUPPORTING FLANGE FOR THE BELL-TYPE TANK INSTALLATION IS OPTIONAL

(1) – BOTTOM-MOST LIVE PARTS; THESE ARE CONNECTED TO THE POTENTIAL OF THE ASSOCIATED AND/OR WIRED CONNECTION CONTACT

- THE DETAILED CONNECTION DIAGRAM IS BINDING FOR THE DESIGNATION OF THE CONNECTION CONTACTS AND PHASES
- CONNECTING OF PARALLEL SELECTOR PLANES REFER TO 10117014

ARRANGEMENT OF SELECTOR CONTACTS, 2-5 COARSE TAP CONNECTIONS

x) FOR 3 COARSE TAP CONNECTIONS
x) AND y) FOR 4 COARSE TAP CONNECTIONS
x), y) AND z) FOR 5 COARSE TAP CONNECTIONS

p = CONNECTION MIN. 3 MM PAPER INSULATED
p* = CONNECTION ALREADY 3 MM PAPER INSULATED BY MR

	DATE	NAME	DOCUMENT NO.	
DFTR.	19.04.2018	RAEDLINGER	SED 5550283 001 02	
CHKD.	25.04.2018	HAUER	CHANGE NO.	SCALE
STAND.	25.04.2018	PRODASTSCHUK	1087395	1:10

DIMENSION IN mm EXCEPT AS NOTED

ON-LOAD TAP-CHANGER VACUTAP® VR
VRS/VRM I 1301 -72,5...300kV-B/C/D WITH MULTIPLE COARSE COS DIMENSION DRAWING

SERIAL NUMBER

MATERIAL NUMBER 100208561E

SHEET 1/2

VACUTAP® VRS | 1301

SELECTOR SIZE		B					C					D				
Um [kV]		72,5	123	170	245	300	72,5	123	170	245	300	72,5	123	170	245	300
DIMENSIONS [mm]	h	2068	2198	2328	2428	2580	2143	2273	2403	2503	2655	2338	2468	2598	2698	2850
	i	1168	1298	1428	1528	1680	1168	1298	1428	1528	1680	1168	1298	1428	1528	1680
	b	425					425					425				
	s	–	–	302	402	554	–	–	302	402	554	–	–	302	402	554
	z	–	–	191	191	191	–	–	191	191	191	–	–	191	191	191
	x	–	–	Φ 620	Φ 620	Φ 620	–	–	Ø 620	Ø 620	Ø 620	–	–	Ø 620	Ø 620	Ø 620
	y	–	–	Φ 56	Φ 56	Φ 56	–	–	Ø 56	Ø 56	Ø 56	–	–	Ø 56	Ø 56	Ø 56
	k	900					975					1170				
	n	233					258					323				
	o	105					105					105				
	t	95					120					185				
	r	105					105					105				
	q	359,5					397					494,5				
OIL VOLUME [dm³]		160	180	200	220	240	160	180	200	220	240	160	180	200	220	240
DISPLACEMENT [dm³]		277	297	327	347	377	279	299	329	349	379	282	302	332	352	382
MAX. WEIGHT [kg]		486	492	505	508	514	496	502	515	518	524	506	512	525	528	534

VACUTAP® VRM | 1301

SELECTOR SIZE		B					C					D				
Um [kV]		72,5	123	170	245	300	72,5	123	170	245	300	72,5	123	170	245	300
DIMENSIONS [mm]	h	2220	2350	2480	2580	2732	2295	2425	2555	2655	2807	2490	2620	2750	2850	3002
	i	1320	1450	1580	1680	1832	1320	1450	1580	1680	1832	1320	1450	1580	1680	1832
	b	576					576					576				
	s	–	–	302	402	554	–	–	302	402	554	–	–	302	402	554
	z	–	–	191	191	191	–	–	191	191	191	–	–	191	191	191
	x	–	–	Φ 620	Φ 620	Φ 620	–	–	Ø 620	Ø 620	Ø 620	–	–	Ø 620	Ø 620	Ø 620
	y	–	–	Φ 56	Φ 56	Φ 56	–	–	Ø 56	Ø 56	Ø 56	–	–	Ø 56	Ø 56	Ø 56
	k	900					975					1170				
	n	233					258					323				
	o	105					105					105				
	t	95					120					185				
	r	105					105					105				
	q	359,5					397					494,5				
OIL VOLUME [dm³]		180	200	230	245	270	180	200	230	245	270	180	200	230	245	270
DISPLACEMENT [dm³]		307	327	357	377	407	309	329	359	379	409	312	332	362	382	412
MAX. WEIGHT [kg]		497	503	516	519	525	507	513	526	529	535	517	523	536	539	545

© MASCHINENFABRIK REINHAUSEN GMBH 2018
THE REPRODUCTION, DISTRIBUTION AND UTILIZATION OF THIS DOCUMENT AS WELL AS THE COMMUNICATION OF ITS CONTENTS TO OTHERS WITHOUT EXPRESS AUTHORIZATION IS PROHIBITED. OFFENDERS WILL BE HELD LIABLE FOR THE PAYMENT OF DAMAGES. ALL RIGHTS RESERVED IN THE EVENT OF THE GRANT OF A PATENT, UTILITY MODEL OR DESIGN.

	DATE	NAME	DOCUMENT NO.	
DFTR.	19.04.2018	RAEDLINGER	SED 5550283 001 02	
CHKD.	25.04.2018	HAUER	CHANGE NO.	SCALE
STAND.	25.04.2018	PRODASTSCHUK	1087395	1:10

DIMENSION IN mm EXCEPT AS NOTED

ON-LOAD TAP-CHANGER VACUTAP® VR
VRS/VRM | 1301 -72,5...300kV-B/C/D WITH MULTIPLE COARSE COS
DIMENSION DRAWING

SERIAL NUMBER

MATERIAL NUMBER 100208561E

© MASCHINENFABRIK REINHAUSEN GMBH 2018
THE REPRODUCTION, DISTRIBUTION AND UTILIZATION OF THIS DOCUMENT AS WELL AS THE COMMUNICATION OF ITS CONTENTS TO OTHERS WITHOUT EXPRESS AUTHORIZATION IS PROHIBITED. OFFENDERS WILL BE HELD LIABLE FOR THE PAYMENT OF DAMAGES. ALL RIGHTS RESERVED IN THE EVENT OF THE GRANT OF A PATENT, UTILITY MODEL OR DESIGN.

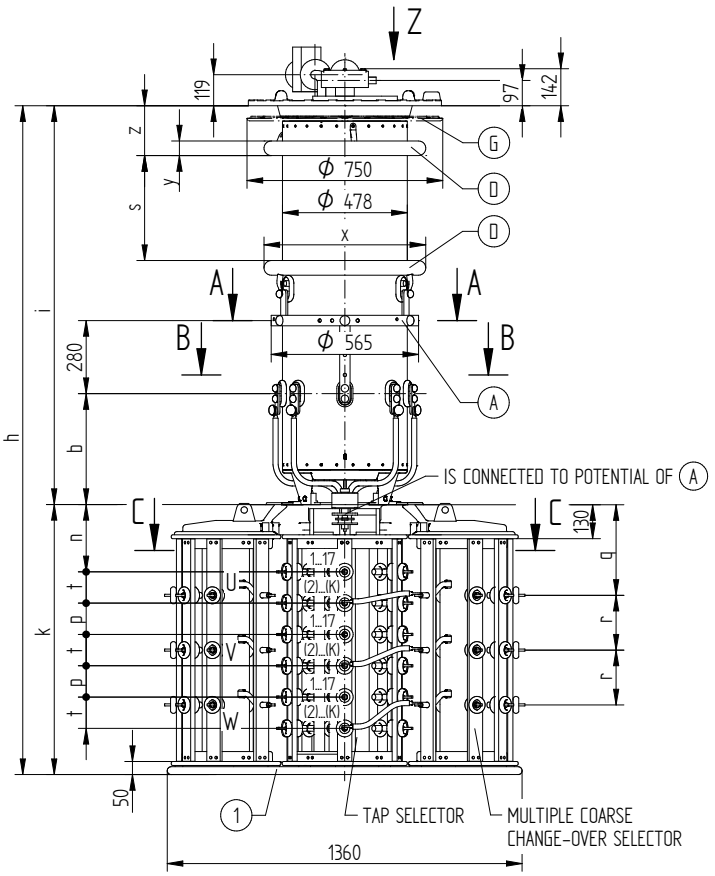

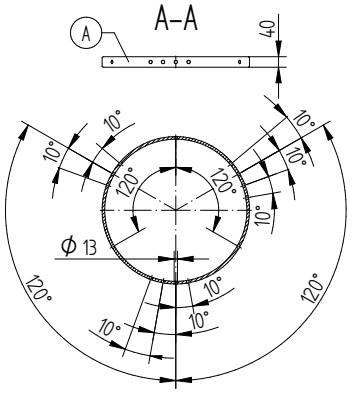

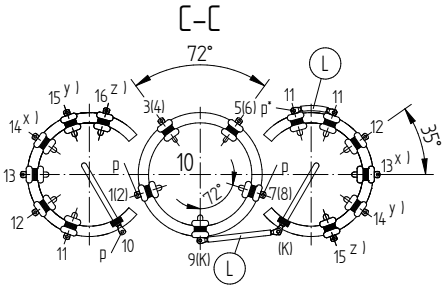

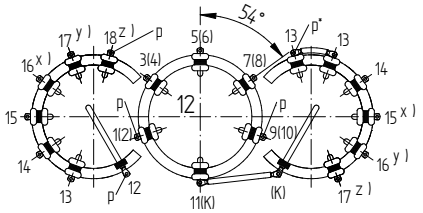

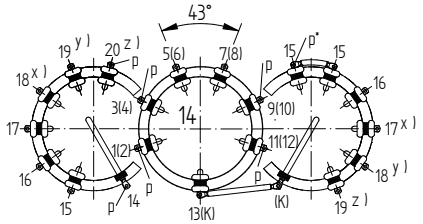

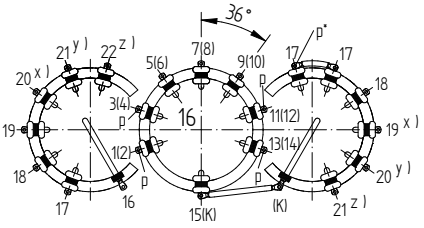

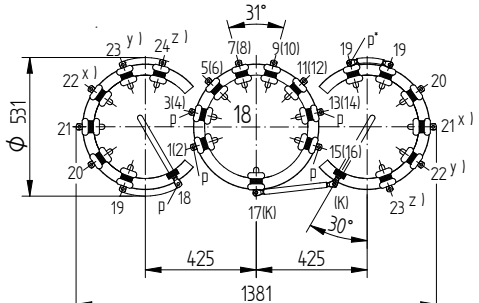

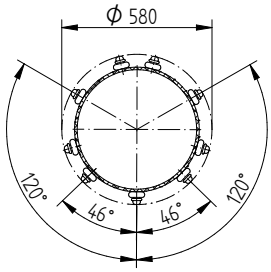

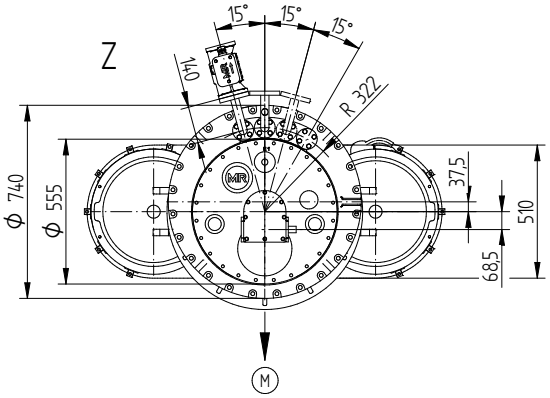

FOR THE TYPE OF OLTC-HEAD REFER TO THE ORDER-SPECIFIC DRAWING OF THE OLTC-HEAD AND DRIVE SHAFTS

(M) – DRIVE SIDE OF SELECTOR
(A) – ON-LOAD TAP-CHANGER CURRENT TAKE-OFF TERMINAL
(D) – SHIELDING RINGS FOR UM OF 170 kV OR GREATER
(G) – SUPPORTING FLANGE FOR THE BELL-TYPE TANK INSTALLATION IS OPTIONAL

(1) – BOTTOM-MOST LIVE PARTS; THESE ARE CONNECTED TO THE POTENTIAL OF THE ASSOCIATED AND/OR WIRED CONNECTION CONTACT

– THE DETAILED CONNECTION DIAGRAM IS BINDING FOR THE DESIGNATION OF THE CONNECTION CONTACTS AND PHASES

ARRANGEMENT OF SELECTOR CONTACTS, 2-5 COARSE TAP CONNECTIONS

x) FOR 3 COARSE TAP CONNECTIONS
x) AND y) FOR 4 COARSE TAP CONNECTIONS
x), y) AND z) FOR 5 COARSE TAP CONNECTIONS

p = CONNECTION MIN. 3 MM PAPER INSULATED
p* = CONNECTION ALREADY 3 MM PAPER INSULATED BY MR

	DATE	NAME	DOCUMENT NO.	
DFTR.	19.04.2018	RAEDLINGER	SED 5550295 001 02	
CHKD.	25.04.2018	HAUER	CHANGE NO.	SCALE
STAND.	25.04.2018	PRODASTSCHUK	1087395	1:10

DIMENSION IN mm EXCEPT AS NOTED

ON-LOAD TAP-CHANGER VACUTAP® VR
VRS/VRMIII 700 Y-72,5...245kV- B/C/D WITH MULT.COARSE COS
DIMENSION DRAWING

SERIAL NUMBER

MATERIAL NUMBER 100208571E

SHEET 1/2

© MASCHINENFABRIK REINHAUSEN GMBH 2018
THE REPRODUCTION, DISTRIBUTION AND UTILIZATION OF THIS DOCUMENT AS WELL AS THE COMMUNICATION OF ITS CONTENTS TO OTHERS WITHOUT EXPRESS AUTHORIZATION IS PROHIBITED. OFFENDERS WILL BE HELD LIABLE FOR THE PAYMENT OF DAMAGES. ALL RIGHTS RESERVED IN THE EVENT OF THE GRANT OF A PATENT, UTILITY MODEL OR DESIGN.

VACUTAP® VRS III 700 Y

SELECTOR SIZE		B				C				D			
Um [kV]		72,5	123	170	245	72,5	123	170	245	72,5	123	170	245
DIMENSIONS [mm]	h	2028	2158	2288	2388	2203	2333	2463	2563	2658	2788	2918	3018
	i	1168	1298	1428	1528	1168	1298	1428	1528	1168	1298	1428	1528
	b	425				425				425			
	s	–	–	302	402	–	–	302	402	–	–	302	402
	z	–	–	191	191	–	–	191	191	–	–	191	191
	x	–	–	ϕ 620	ϕ 620	–	–	Ø 620	Ø 620	–	–	Ø 620	Ø 620
	y	–	–	ϕ 56	ϕ 56	–	–	Ø 56	Ø 56	–	–	Ø 56	Ø 56
	k	860				1035				1490			
	n	233				258				323			
	p	95				120				185			
	t	95				120				185			
	r	166,5				210				327			
	q	303				347				457,5			
OIL CONTENT [dm³]		150	170	190	210	150	170	190	210	150	170	190	210
DISPLACEMENT [dm³]		275	295	325	345	281	301	331	351	290	310	340	360
MAX. WEIGHT [kg]		532	538	550	554	542	548	560	564	552	558	570	574

VACUTAP® VRM III 700 Y

SELECTOR SIZE		B				C				D			
Um [kV]		72,5	123	170	245	72,5	123	170	245	72,5	123	170	245
DIMENSIONS [mm]	h	2180	2310	2440	2540	2355	2485	2615	2715	2810	2940	3070	3170
	i	1320	1450	1580	1680	1320	1450	1580	1680	1320	1450	1580	1680
	b	576				576				576			
	s	–	–	302	402	–	–	302	402	–	–	302	402
	z	–	–	191	191	–	–	191	191	–	–	191	191
	x	–	–	ϕ 620	ϕ 620	–	–	Ø 620	Ø 620	–	–	Ø 620	Ø 620
	y	–	–	ϕ 56	ϕ 56	–	–	Ø 56	Ø 56	–	–	Ø 56	Ø 56
	k	860				1035				1490			
	n	233				258				323			
	p	95				120				185			
	t	95				120				185			
	r	166,5				210				327			
	q	303				347				457,5			
OIL VOLUME [dm³]		170	190	210	235	170	190	210	235	170	190	210	235
DISPLACEMENT [dm³]		305	325	355	375	311	331	361	381	320	340	370	390
MAX. WEIGHT [kg]		552	558	570	574	562	568	580	584	572	578	590	594

	DATE	NAME	DOCUMENT NO.	
DFTR.	19.04.2018	RAEDLINGER	SED 5550295 001 02	
CHKD.	25.04.2018	HAUER	CHANGE NO.	SCALE 1:10
STAND.	25.04.2018	PRODASTSCHUK	1087395	

DIMENSION IN mm EXCEPT AS NOTED

ON-LOAD TAP-CHANGER VACUTAP® VR
VRS/VRMIII 700 Y-72,5...245kV- B/C/D WITH MULT.COARSE COS
DIMENSION DRAWING

SERIAL NUMBER

MATERIAL NUMBER 100208571E

SHEET 2/2

MASCHINENFABRIK REINHAUSEN GMBH COPYRIGHT RESERVED
THE REPRODUCTION, DISTRIBUTION AND UTILIZATION OF THIS DOCUMENT AS WELL AS THE COMMUNICATION OF ITS CONTENTS TO OTHERS WITHOUT EXPRESS AUTHORIZATION IS PROHIBITED. OFFENDERS WILL BE HELD LIABLE FOR THE PAYMENT OF DAMAGES. ALL RIGHTS RESERVED IN THE EVENT OF THE GRANT OF A PATENT, UTILITY MODEL OR DESIGN.

	WITHOUT CHANGE-OVER SELECTOR	0

	WITH CHANGE-OVER SELECTOR (REVERSING / COARSE CHANGE-OVER SELECTOR)	W, G

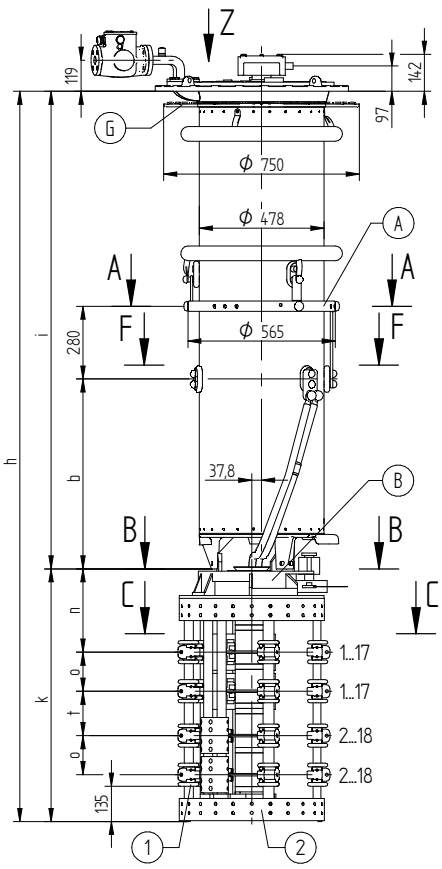

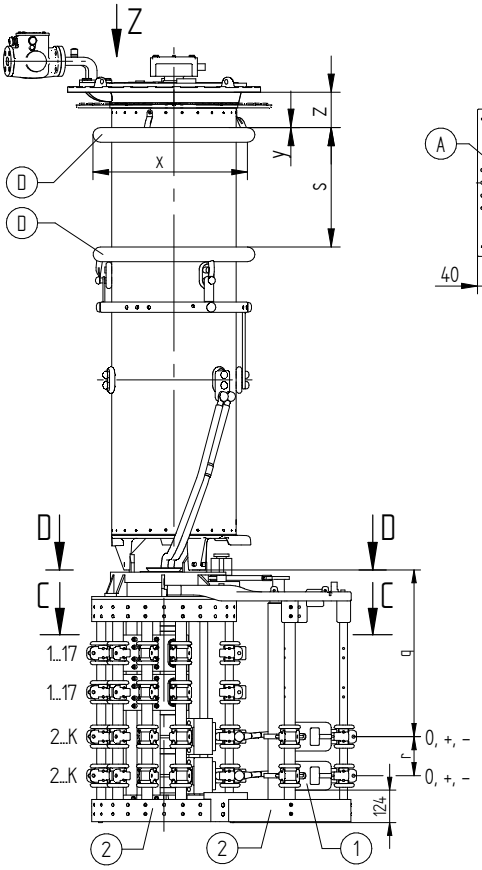

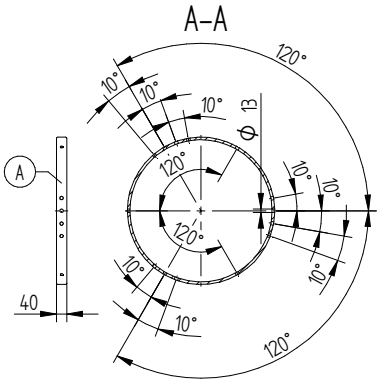

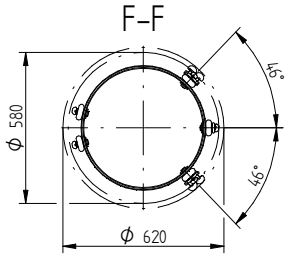

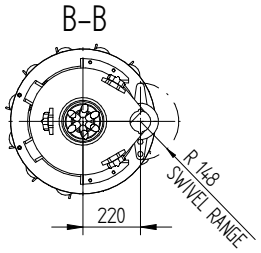

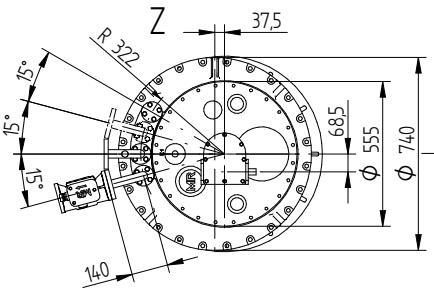

D–D
REVERSING CHANGE-OVER SELECTOR (1W)

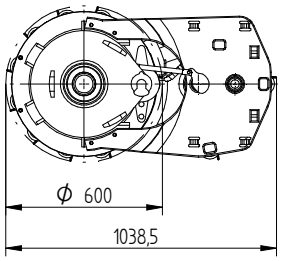

D–D
COARSE CHANGE-OVER SELECTOR (1G)

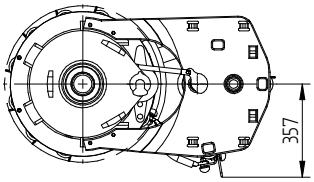

FOR THE TYPE OF OLTC-HEAD REFER TO THE ORDER-SPECIFIC DRAWING OF THE OLTC-HEAD AND DRIVE SHAFTS

(M) – DRIVE SIDE OF SELECTOR
(A) – ON-LOAD TAP-CHANGER CURRENT TAKE-OFF TERMINAL
(B) – IS CONNECTED TO POTENTIAL OF (A)
(D) – SHIELDING RINGS FOR UM OF 170 kV OR GREATER
(G) – SUPPORTING FLANGE FOR THE BELL-TYPE TANK INSTALLATION IS OPTIONAL
(1) – BOTTOM-MOST LIVE PARTS; THESE ARE CONNECTED TO THE POTENTIAL OF THE ASSOCIATED AND/OR WIRED CONNECTION CONTACT
(2) – SELECTOR BASE IS MADE OF INSULATING MATERIAL

– THE DETAILED CONNECTION DIAGRAM IS BINDING FOR THE DESIGNATION OF THE CONNECTION CONTACTS AND PHASES
– C–C: REFER TO 10009030
– D–D: TYPE WITH CONNECTING LEAD 3W/3G REFER TO 10010019

	DATE	NAME	DOCUMENT NO.	
DFTR.	26.07.2022	BUTERUS	SED 8942283 001 00	
CHKD.	27.07.2022	WREDE	CHANGE NO.	SCALE
STAND.	27.07.2022	KLEYN	1116192	1:10

DIMENSION IN mm EXCEPT AS NOTED

ON-LOAD TAP-CHANGER VACUTAP® VR®
VRL I 1601 – 72,5 ... 420 kV – RC, RD/RDE
DIMENSION DRAWING

SERIAL NUMBER

MATERIAL NUMBER 101714710E

SHEET 1/2

SELECTOR SIZE		RC							RD / RDE						
Um [kV]		72,5	123	170	245	300	362	420	72,5	123	170	245	300	362	420
DIMENSIONS [mm]	h	2440	2570	2700	2800	2952	3055	3174	2520	2650	2780	2880	3032	3135	3254
	i	1471	1601	1731	1831	1983	2086	2205	1471	1601	1731	1831	1983	2086	2205
	b	728							728						
	s	–	–	302	402	554	573	692	–	–	302	402	554	573	692
	z	–	–	191	191	191	228	228	–	–	191	191	191	228	228
	x	–	–	Φ 620	Φ 620	Φ 620	Φ 695	Φ 695	–	–	Φ 620	Φ 620	Φ 620	Φ 695	Φ 695
	y	–	–	Φ 56	Φ 56	Φ 56	Φ100	Φ100	–	–	Φ 56	Φ 56	Φ 56	Φ100	Φ100
	k	969							1049						
	n	319							359						
	o	150							150						
	t	170							210						
	r	150							150						
	q	639							719						
OIL VOLUME [dm³]		205	225	245	265	285	305	325	205	225	245	265	285	305	325
DISPLACEMENT [dm³]		313	343	373	393	423	463	483	315	345	375	395	425	465	485
MAX. WEIGHT [kg]		479	485	497	501	507	514	519	484	490	502	506	512	519	524

MASCHINENFABRIK REINHAUSEN GMBH COPYRIGHT RESERVED
THE REPRODUCTION, DISTRIBUTION AND UTILIZATION OF THIS DOCUMENT AS WELL AS THE COMMUNICATION OF ITS CONTENTS TO OTHERS WITHOUT EXPRESS AUTHORIZATION IS PROHIBITED. OFFENDERS WILL BE HELD LIABLE FOR THE PAYMENT OF DAMAGES. ALL RIGHTS RESERVED IN THE EVENT OF THE GRANT OF A PATENT, UTILITY MODEL OR DESIGN.

	DATE	NAME	DOCUMENT NO.	
DFTR.	26.07.2022	BUTERUS	SED 8942283 001 00	
CHKD.	27.07.2022	WREDE	CHANGE NO.	SCALE
STAND.	27.07.2022	KLEYN	1116192	1:10

DIMENSION IN mm EXCEPT AS NOTED

ON-LOAD TAP-CHANGER VACUTAP® VR®
VRL I 1601 – 72,5 ... 420 kV – RC, RD/RDE
DIMENSION DRAWING

SERIAL NUMBER

MATERIAL NUMBER 101714710E

SHEET 2/2

MASCHINENFABRIK REINHAUSEN GMBH COPYRIGHT RESERVED
THE REPRODUCTION, DISTRIBUTION AND UTILIZATION OF THIS DOCUMENT AS WELL AS THE COMMUNICATION OF ITS CONTENTS TO OTHERS WITHOUT EXPRESS AUTHORIZATION IS PROHIBITED. OFFENDERS WILL BE HELD LIABLE FOR THE PAYMENT OF DAMAGES. ALL RIGHTS RESERVED IN THE EVENT OF THE GRANT OF A PATENT, UTILITY MODEL OR DESIGN.

	WITHOUT CHANGE-OVER SELECTOR	0

	WITH CHANGE-OVER SELECTOR (REVERSING / COARSE CHANGE-OVER SELECTOR)	W, G

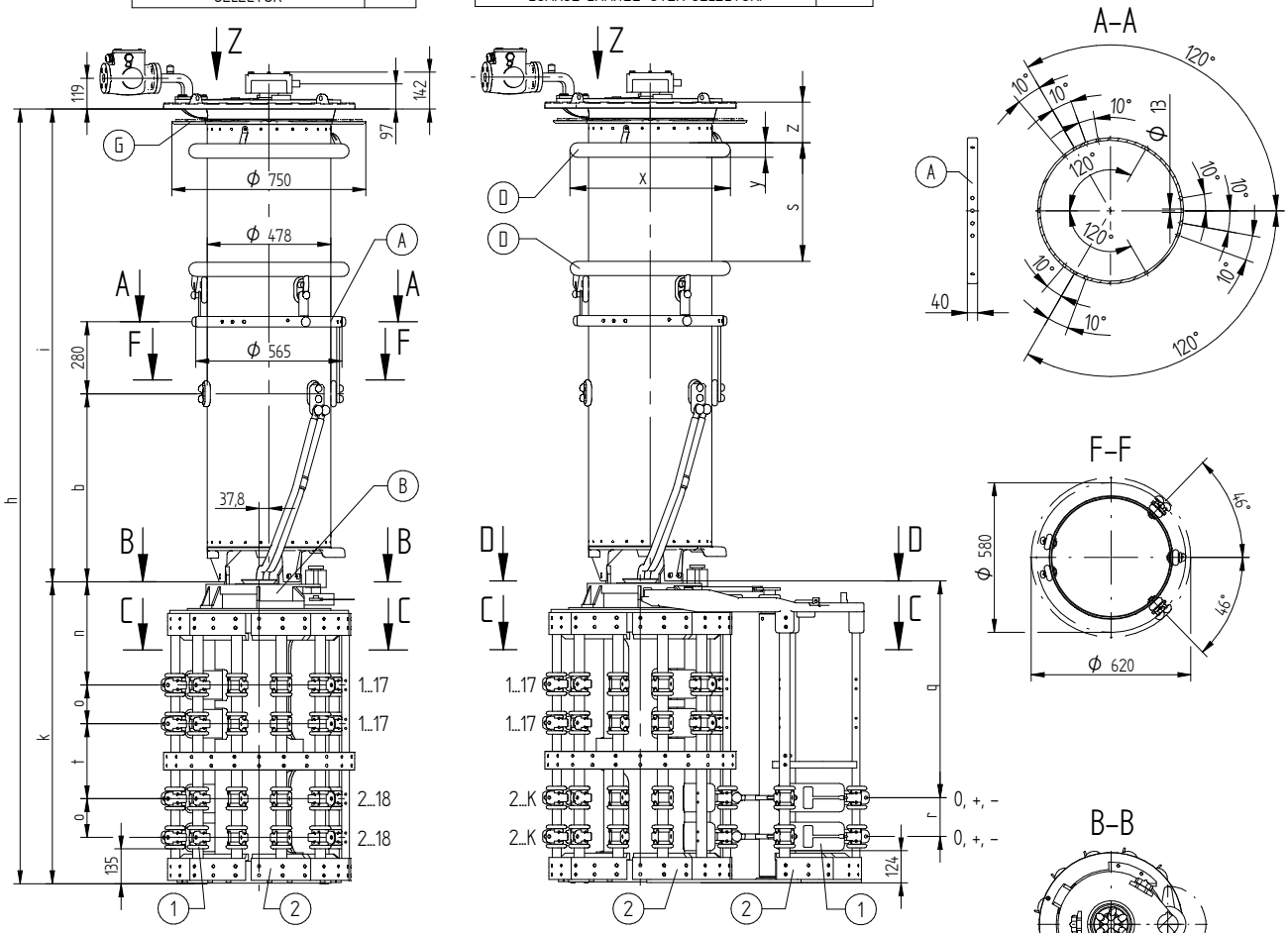

FOR THE TYPE OF OLTC-HEAD REFER TO THE ORDER-SPECIFIC DRAWING OF THE OLTC-HEAD AND DRIVE SHAFTS

(M) – DRIVE SIDE OF SELECTOR
(A) – ON-LOAD TAP-CHANGER CURRENT TAKE-OFF TERMINAL
(B) – IS CONNECTED TO POTENTIAL OF (A)
(D) – SHIELDING RINGS FOR UM OF 170 kV OR GREATER
(G) – SUPPORTING FLANGE FOR THE BELL-TYPE TANK INSTALLATION IS OPTIONAL
(1) – BOTTOM-MOST LIVE PARTS; THESE ARE CONNECTED TO THE POTENTIAL OF THE ASSOCIATED AND/OR WIRED CONNECTION CONTACT
(2) – SELECTOR BASE IS MADE OF INSULATING MATERIAL

– THE DETAILED CONNECTION DIAGRAM IS BINDING FOR THE DESIGNATION OF THE CONNECTION CONTACTS AND PHASES
– C-C: REFER TO 10016570
– D-D: TYPE WITH CONNECTING LEAD 3W/3G REFER TO 10017264

	DATE	NAME	DOCUMENT NO.	
DFTR.	26.07.2022	BUTERUS	SED 8943792 001 00	
CHKD.	27.07.2022	WREDE	CHANGE NO.	SCALE
STAND.	27.07.2022	KLEYN	1116192	1:10

DIMENSION IN mm EXCEPT AS NOTED

ON-LOAD TAP-CHANGER VACUTAP® VR®
VRL I 1601 – 72,5 ... 420 kV – RE
DIMENSION DRAWING

SERIAL NUMBER

MATERIAL NUMBER 101714720E

SHEET 1/2

SELECTOR SIZE		RE						
Um [kV]		72,5	123	170	245	300	362	420
DIMENSIONS [mm]	h	2640	2770	2900	3000	3152	3255	3374
	i	1471	1601	1731	1831	1983	2086	2205
	b	728						
	s	-	-	302	402	554	573	692
	z	-	-	191	191	191	228	228
	x	-	-	ϕ 620	ϕ 620	ϕ 620	ϕ 695	ϕ 695
	y	-	-	ϕ 56	ϕ 56	ϕ 56	ϕ100	ϕ100
	k	1169						
	n	399						
	o	150						
	t	290						
	r	150						
	q	839						
OIL VOLUME [dm³]		205	225	245	265	285	305	325
DISPLACEMENT [dm³]		348	378	408	428	458	498	518
MAX. WEIGHT [kg]		541	547	559	563	569	576	581

MASCHINENFABRIK REINHAUSEN GMBH COPYRIGHT RESERVED
THE REPRODUCTION, DISTRIBUTION AND UTILIZATION OF THIS DOCUMENT AS WELL AS THE COMMUNICATION OF ITS CONTENTS TO OTHERS WITHOUT EXPRESS AUTHORIZATION IS PROHIBITED. OFFENDERS WILL BE HELD LIABLE FOR THE PAYMENT OF DAMAGES. ALL RIGHTS RESERVED IN THE EVENT OF THE GRANT OF A PATENT, UTILITY MODEL OR DESIGN.

	DATE	NAME	DOCUMENT NO.	
DFTR.	26.07.2022	BUTERUS	SED 8943792 001 00	
CHKD.	27.07.2022	WREDE	CHANGE NO.	SCALE
STAND.	27.07.2022	KLEYN	1116192	1:10

DIMENSION IN mm EXCEPT AS NOTED

ON-LOAD TAP-CHANGER VACUTAP® VR®
VRL I 1601 – 72,5 ... 420 kV – RE
DIMENSION DRAWING

SERIAL NUMBER

MATERIAL NUMBER 101714720E

SHEET 2/2

MASCHINENFABRIK REINHAUSEN GMBH COPYRIGHT RESERVED
THE REPRODUCTION, DISTRIBUTION AND UTILIZATION OF THIS DOCUMENT AS WELL AS THE COMMUNICATION OF ITS CONTENTS TO OTHERS WITHOUT EXPRESS AUTHORIZATION IS PROHIBITED. OFFENDERS WILL BE HELD LIABLE FOR THE PAYMENT OF DAMAGES. ALL RIGHTS RESERVED IN THE EVENT OF THE GRANT OF A PATENT, UTILITY MODEL OR DESIGN.

WITH CHANGE-OVER SELECTOR (REVERSING CHANGE-OVER SELECTOR AND COARSE CHANGE-OVER SELECTOR)	W , G

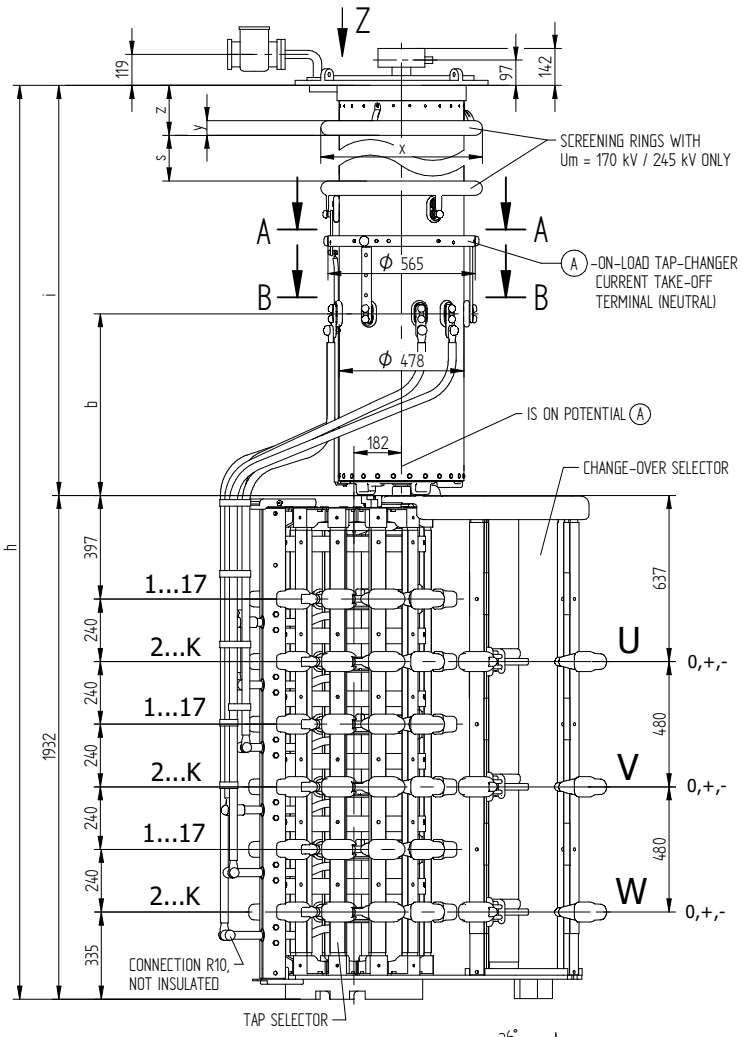

ARRANGEMENT OF CHANGE-OVER SELECTOR CONTACTS

(PLAN VIEW)

COARSE CHANGE-OVER SELECTOR

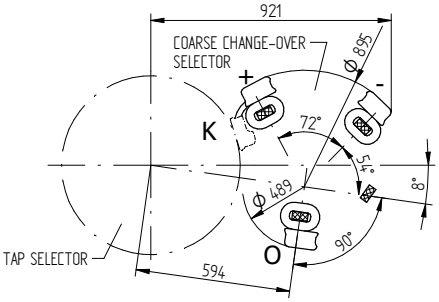

CONNECTING LEAD BETWEEN K AND + IS ALREADY INSTALLED AT THE FACTORY.

REVERSING CHANGE-OVER SELECTOR

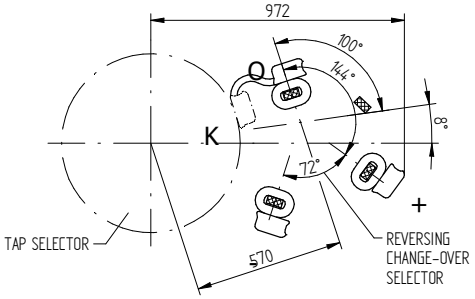

CONNECTING LEAD BETWEEN K AND O IS ALREADY INSTALLED AT THE FACTORY.

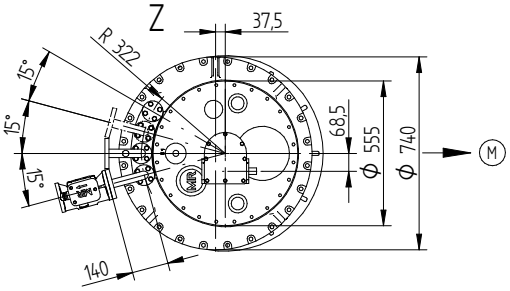

ARRANGEMENT OF TAP SELECTOR CONTACTS

(PLAN VIEW)

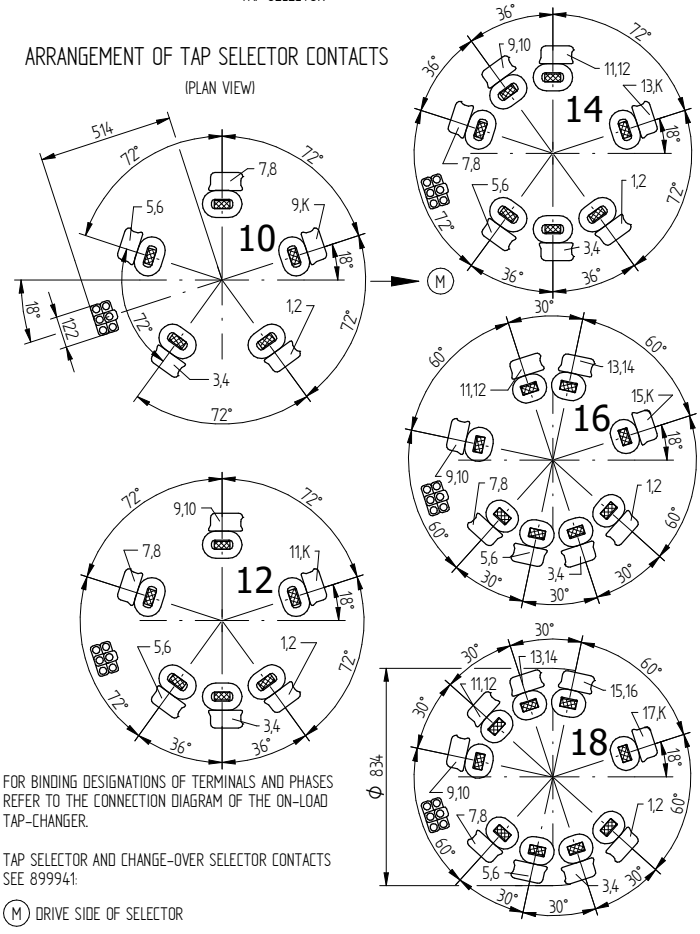

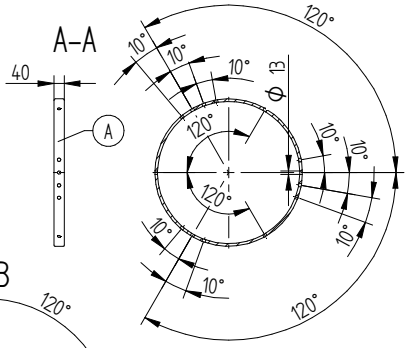

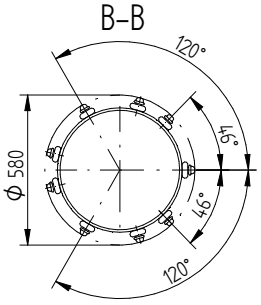

FOR BINDING DESIGNATIONS OF TERMINALS AND PHASES REFER TO THE CONNECTION DIAGRAM OF THE ON-LOAD TAP-CHANGER.

TAP SELECTOR AND CHANGE-OVER SELECTOR CONTACTS SEE 899941:

(M) DRIVE SIDE OF SELECTOR

SELECTOR SIZE		E			
Um [kV]		72,5	123	170	245
DIMENSIONS [MM]	h	3372	3502	3632	3732
	i	1440	1570	1700	1800
	b	697			
	s	-	-	302	402
	z	-	-	191	191
	x	-	-	Φ 620	Φ 620
	y	-	-	Φ 56	Φ 56
OIL VOLUME [DM³]		210	230	250	270
DISPLACEMENT [DM³]		400	420	440	460
MAX. WEIGHT [KG]		807			

	DATE	NAME	DOCUMENT NO.	
DFTR.	26.07.2022	BUTERUS	SED 8941115 001 00	
CHKD.	27.07.2022	WREDE	CHANGE NO.	SCALE
STAND.	27.07.2022	KLEYN	1116192	1:10

DIMENSION IN mm EXCEPT AS NOTED

ON-LOAD TAP-CHANGER VACUTAP® VR®
VRL III 1600 – 72,5 ... 245 kV – E
DIMENSION DRAWING

SERIAL NUMBER

MATERIAL NUMBER 101714700E

SHEET 1/1

© MASCHINENFABRIK REINHAUSEN GMBH 2020
THE REPRODUCTION, DISTRIBUTION AND UTILIZATION OF THIS DOCUMENT AS WELL AS THE COMMUNICATION OF ITS CONTENTS TO OTHERS WITHOUT EXPRESS AUTHORIZATION IS PROHIBITED. OFFENDERS WILL BE HELD LIABLE FOR THE PAYMENT OF DAMAGES. ALL RIGHTS RESERVED IN THE EVENT OF THE GRANT OF A PATENT, UTILITY MODEL OR DESIGN.

WITHOUT CHANGE-OVER SELECTOR	0

WITH CHANGE-OVER SELECTOR (REVERSING / COARSE CHANGE-OVER SELECTOR)	W, G

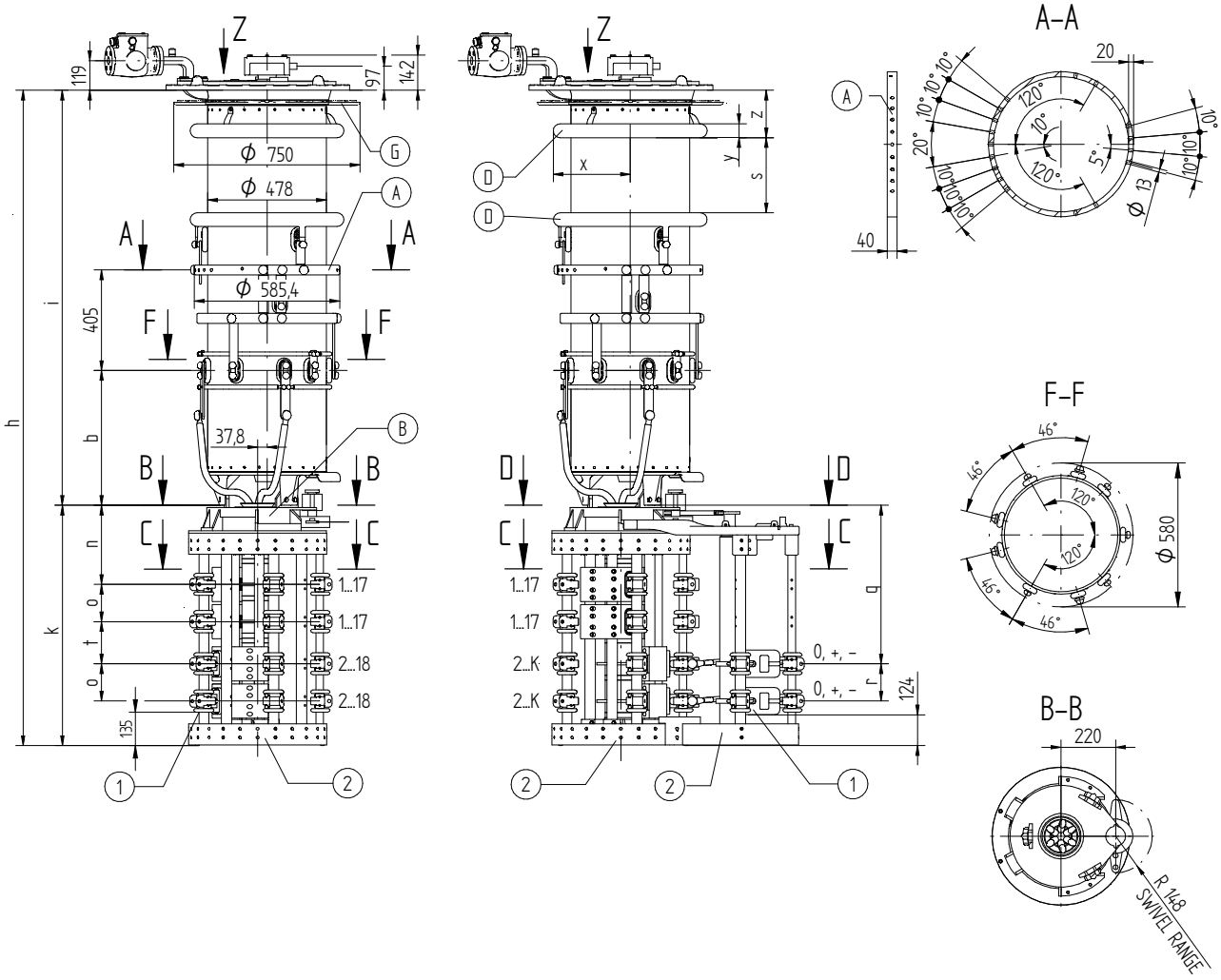

FOR THE TYPE OF THE OLTC-HEAD REFER TO THE ORDER-SPECIFIC DRAWING OF THE OLTC-HEAD AND DRIVE SHAFTS

(M) – DRIVE SIDE OF SELECTOR
(A) – ON-LOAD TAP-CHANGER CURRENT TAKE-OFF TERMINAL
(B) – IS CONNECTED TO POTENTIAL OF (A)
(D) – SHIELDING RINGS FOR UM OF 170 kV OR GREATER
(G) – SUPPORTING FLANGE FOR THE BELL-TYPE TANK INSTALLATION IS OPTIONAL
(1) – BOTTOM-MOST LIVE PARTS; THESE ARE CONNECTED TO THE POTENTIAL OF THE ASSOCIATED AND/OR WIRED CONNECTION CONTACT
(2) – SELECTOR BASE IS MADE OF INSULATING MATERIAL

– THE DETAILED CONNECTION DIAGRAM IS BINDING FOR THE DESIGNATION OF THE CONNECTION CONTACTS AND PHASES
– C–C: REFER TO 10009030
– D–D: TYPE WITH CONNECTING LEAD 3W/3G REFER TO 10010019
– CONNECTING OF PARALLEL SELECTOR PLANES REFER TO 10009916

	DATE	NAME	DOCUMENT NO.	
DFTR.	05.11.2021	BUTERUS	SED 8367958 001 01	
CHKD.	08.11.2021	WREDE	CHANGE NO.	SCALE
STAND.	09.11.2021	KLEYN	1109989	1:10

DIMENSION IN mm EXCEPT AS NOTED

ON-LOAD TAP-CHANGER VACUTAP® VR®
VRL I 1801/2001/2401 – 72,5...420 – RC/RD/RDE
DIMENSION DRAWING

SERIAL NUMBER

MATERIAL NUMBER 101624770E

SHEET 1/2

© MASCHINENFABRIK REINHAUSEN GMBH 2020
THE REPRODUCTION, DISTRIBUTION AND UTILIZATION OF THIS DOCUMENT AS WELL AS THE COMMUNICATION OF ITS CONTENTS TO OTHERS WITHOUT EXPRESS AUTHORIZATION IS PROHIBITED. OFFENDERS WILL BE HELD LIABLE FOR THE PAYMENT OF DAMAGES. ALL RIGHTS RESERVED IN THE EVENT OF THE GRANT OF A PATENT, UTILITY MODEL OR DESIGN.

VACUTAP® VRL I 1801 / 2001

SELECTOR SIZE		RC						
Um [kV]		72,5	123	170	245	300	362	420
DIMENSIONS [mm]	h	2381	2511	2641	2741	2893	2996	3115
	b	543	543	543	543	543	543	543
	i	1412	1542	1672	1772	1924	2027	2146
	s	–	–	302	402	554	573	692
	z	–	–	191	191	191	228	228
	x	–	–	Ø 620	Ø 620	Ø 620	Ø 695	Ø 695
	y	–	–	Ø 56	Ø 56	Ø 56	Ø 100	Ø 100
	k	969						
	n	319						
	o	150						
	t	170						
	r	150						
	q	639						
OIL VOLUME [dm³]		185	210	230	250	275	300	320
DISPLACEMENT [dm³]		300	330	360	380	415	450	470
MAX. WEIGHT [kg]		537	545	557	560	568	575	579

VACUTAP® VRL I 1801 / 2001

SELECTOR SIZE		RD / RDE						
Um [kV]		72,5	123	170	245	300	362	420
DIMENSIONS [mm]	h	2461	2591	2721	2821	2973	3076	3195
	b	543	543	543	543	543	543	543
	i	1412	1542	1672	1772	1924	2027	2146
	s	–	–	302	402	554	573	692
	z	–	–	191	191	191	228	228
	x	–	–	Ø 620	Ø 620	Ø 620	Ø 695	Ø 695
	y	–	–	Ø 56	Ø 56	Ø 56	Ø 100	Ø 100
	k	1049						
	n	359						
	o	150						
	t	210						
	r	150						
	q	719						
OIL VOLUME [dm³]		185	210	230	250	275	300	320
DISPLACEMENT [dm³]		302	332	362	382	417	452	472
MAX. WEIGHT [kg]		542	550	562	565	573	580	584

	DATE	NAME	DOCUMENT NO.	
DFTR.	05.11.2021	BUTERUS	SED 8367958 001 01	
CHK'D.	08.11.2021	WREDE	CHANGE NO.	SCALE
STAND.	09.11.2021	KLEYN	1109989	1:10

DIMENSION IN mm EXCEPT AS NOTED

ON-LOAD TAP-CHANGER VACUTAP® VR®
VRL I 1801/2001/2401 – 72,5...420 – RC/RD/RDE
DIMENSION DRAWING

SERIAL NUMBER

MATERIAL NUMBER 101624770E

SHEET 2/2

© MASCHINENFABRIK REINHAUSEN GMBH 2020
THE REPRODUCTION, DISTRIBUTION AND UTILIZATION OF THIS DOCUMENT AS WELL AS THE COMMUNICATION OF ITS CONTENTS TO OTHERS WITHOUT EXPRESS AUTHORIZATION IS PROHIBITED. OFFENDERS WILL BE HELD LIABLE FOR THE PAYMENT OF DAMAGES. ALL RIGHTS RESERVED IN THE EVENT OF THE GRANT OF A PATENT, UTILITY MODEL OR DESIGN.

WITHOUT CHANGE-OVER SELECTOR	0

WITH CHANGE-OVER SELECTOR (REVERSING / COARSE CHANGE-OVER SELECTOR)	W, G

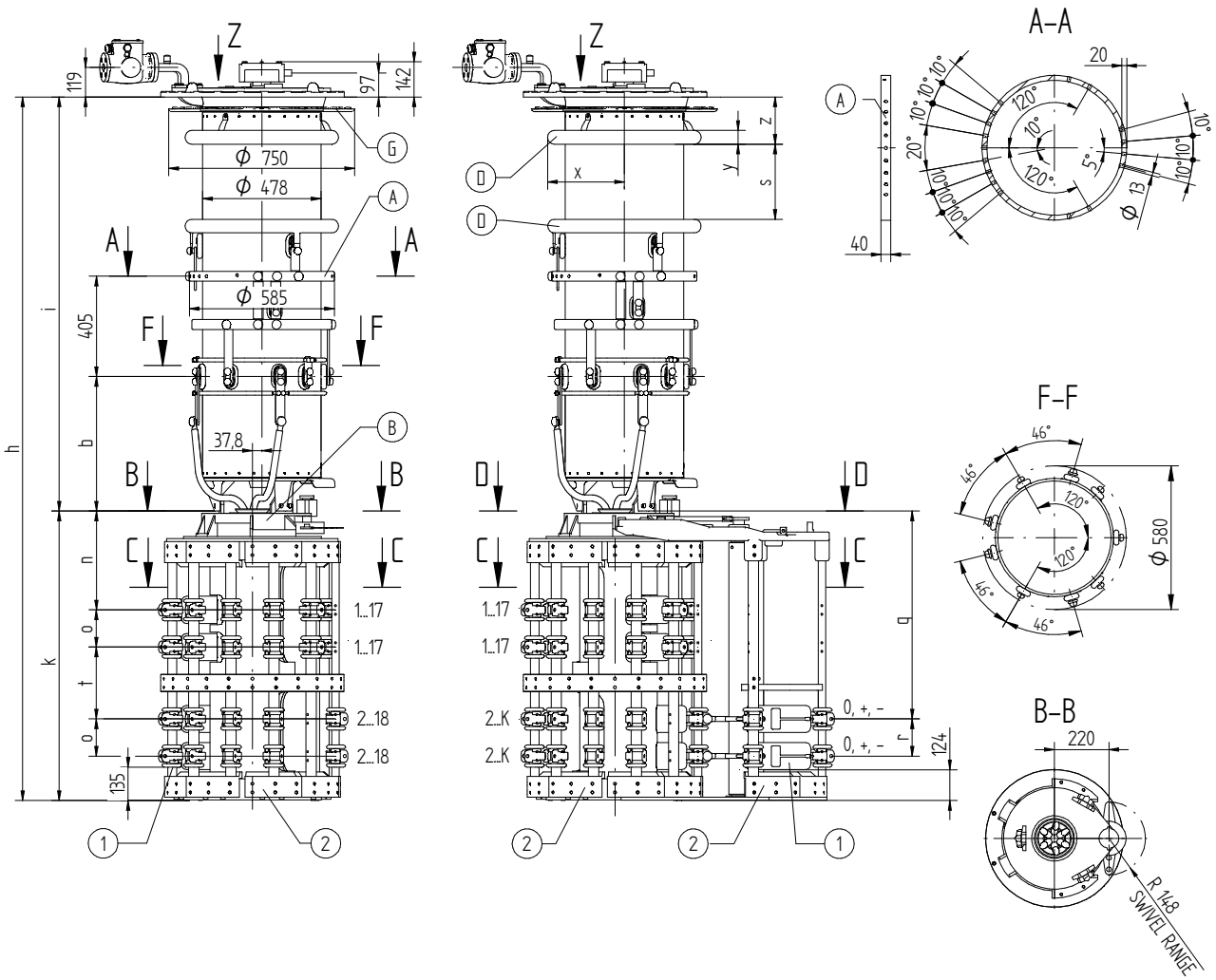

FOR THE TYPE OF THE OLTC-HEAD REFER TO THE ORDER-SPECIFIC DRAWING OF THE OLTC-HEAD AND DRIVE SHAFTS

(M) – DRIVE SIDE OF SELECTOR
(A) – ON-LOAD TAP-CHANGER CURRENT TAKE-OFF TERMINAL
(B) – IS CONNECTED TO POTENTIAL OF (A)
(D) – SHIELDING RINGS FOR UM OF 170 kV OR GREATER
(G) – SUPPORTING FLANGE FOR THE BELL-TYPE TANK INSTALLATION IS OPTIONAL
(1) – BOTTOM-MOST LIVE PARTS; THESE ARE CONNECTED TO THE POTENTIAL OF THE ASSOCIATED AND/OR WIRED CONNECTION CONTACT
(2) – SELECTOR BASE IS MADE OF INSULATING MATERIAL

– THE DETAILED CONNECTION DIAGRAM IS BINDING FOR THE DESIGNATION OF THE CONNECTION CONTACTS AND PHASES
– C-C: REFER TO 10016570
– D-D: TYPE WITH CONNECTING LEAD 3W/3G REFER TO 10017264
– CONNECTING OF PARALLEL SELECTOR PLANES REFER TO 10009916

	DATE	NAME	DOCUMENT NO.	
DFTR.	05.11.2021	BUTERUS	SED 8367960 001 00	
CHKD.	08.11.2021	WREDE	CHANGE NO.	SCALE
STAND.	09.11.2021	KLEYN	1109989	1:10

DIMENSION IN mm EXCEPT AS NOTED

ON-LOAD TAP-CHANGER VACUTAP® VR®
VRL I 1801/2001/2401 – 72,5...420 – RE
DIMENSION DRAWING

SERIAL NUMBER

MATERIAL NUMBER 101624780E

SHEET 1/2

VACUTAP® VRL I 1801 / 2001

SELECTOR SIZE		RE						
Um [kV]		72,5	123	170	245	300	362	420
DIMENSIONS [mm]	h	2582	2712	2842	2942	3094	3197	3316
	b	543	543	543	543	543	543	543
	i	1412	1542	1672	1772	1924	2027	2146
	s	–	–	302	402	554	573	692
	z	–	–	191	191	191	228	228
	x	–	–	Ø 620	Ø 620	Ø 620	Ø 695	Ø 695
	y	–	–	Ø 56	Ø 56	Ø 56	Ø 100	Ø 100
	k	1170						
	n	400						
	o	150						
	t	290						
	r	150						
	q	840						
OIL VOLUME [dm³]		185	210	230	250	275	300	320
DISPLACEMENT [dm³]		337	367	397	417	452	487	507
MAX. WEIGHT [kg]		630	638	625	653	661	668	672

© MASCHINENFABRIK REINHAUSEN GMBH 2020
THE REPRODUCTION, DISTRIBUTION AND UTILIZATION OF THIS DOCUMENT AS WELL AS THE COMMUNICATION OF ITS CONTENTS TO OTHERS WITHOUT EXPRESS AUTHORIZATION IS PROHIBITED. OFFENDERS WILL BE HELD LIABLE FOR THE PAYMENT OF DAMAGES. ALL RIGHTS RESERVED IN THE EVENT OF THE GRANT OF A PATENT, UTILITY MODEL OR DESIGN.

	DATE	NAME	DOCUMENT NO.	
DFTR.	05.11.2021	BUTERUS	SED 8367960 001 00	
CHKD.	08.11.2021	WREDE	CHANGE NO.	SCALE
STAND.	09.11.2021	KLEYN	1109989	1:10

DIMENSION IN mm EXCEPT AS NOTED

ON-LOAD TAP-CHANGER VACUTAP® VR®
VRL I 1801/2001/2401 – 72,5...420 – RE
DIMENSION DRAWING

SERIAL NUMBER

MATERIAL NUMBER 101624780E

SHEET 2/2

© MASCHINENFABRIK REINHAUSEN GMBH 2020
THE REPRODUCTION, DISTRIBUTION AND UTILIZATION OF THIS DOCUMENT AS WELL AS THE COMMUNICATION OF ITS CONTENTS TO OTHERS WITHOUT EXPRESS AUTHORIZATION IS PROHIBITED. OFFENDERS WILL BE HELD LIABLE FOR THE PAYMENT OF DAMAGES. ALL RIGHTS RESERVED IN THE EVENT OF THE GRANT OF A PATENT, UTILITY MODEL OR DESIGN.

WITHOUT CHANGE-OVER SELECTOR	0

WITH CHANGE-OVER SELECTOR (REVERSING / COARSE CHANGE-OVER SELECTOR)	W, G

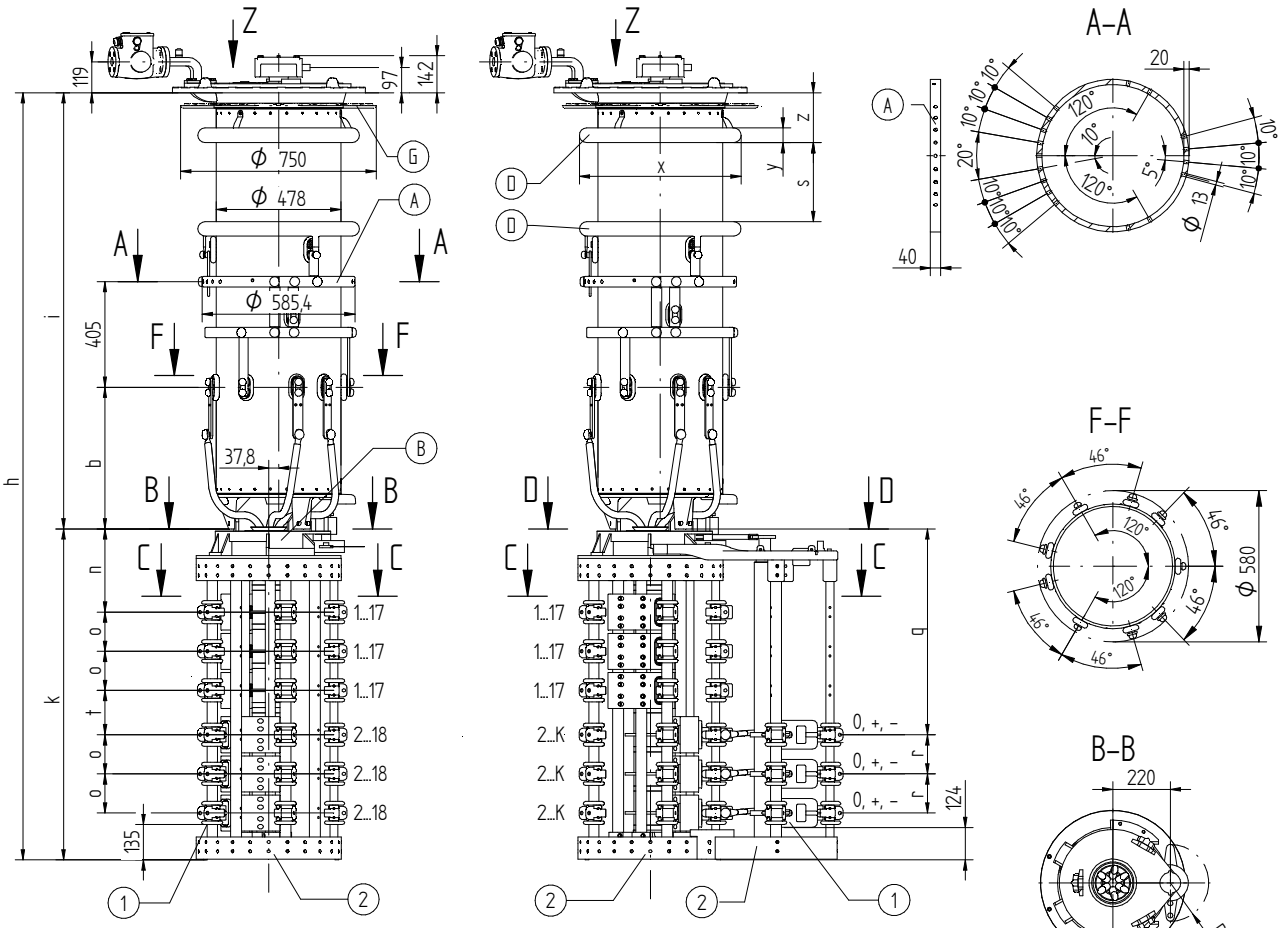

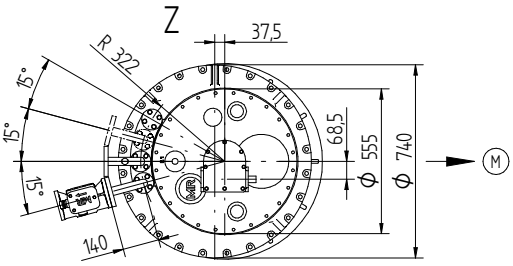

D–D
REVERSING CHANGE-OVER SELECTOR (1W)

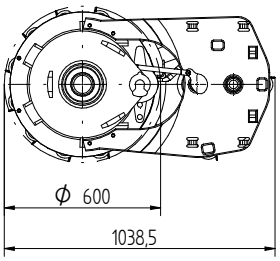

D–D
COARSE CHANGE-OVER SELECTOR (1G)

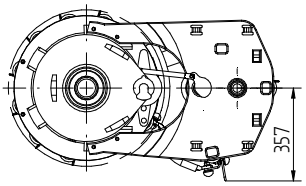

FOR THE TYPE OF THE OLTC-HEAD REFER TO THE ORDER-SPECIFIC DRAWING OF THE OLTC-HEAD AND DRIVE SHAFTS

(M) – DRIVE SIDE OF SELECTOR
(A) – ON-LOAD TAP-CHANGER CURRENT TAKE-OFF TERMINAL
(B) – IS CONNECTED TO POTENTIAL OF (A)
(D) – SHIELDING RINGS FOR UM OF 170 kV OR GREATER
(G) – SUPPORTING FLANGE FOR THE BELL-TYPE TANK INSTALLATION IS OPTIONAL
(1) – BOTTOM-MOST LIVE PARTS; THESE ARE CONNECTED TO THE POTENTIAL OF THE ASSOCIATED AND/OR WIRED CONNECTION CONTACT
(2) – SELECTOR BASE IS MADE OF INSULATING MATERIAL

– THE DETAILED CONNECTION DIAGRAM IS BINDING FOR THE DESIGNATION OF THE CONNECTION CONTACTS AND PHASES
– C–C: REFER TO 10009030
– D–D: TYPE WITH CONNECTING LEAD 3W/3G REFER TO 10010019
– CONNECTING OF PARALLEL SELECTOR PLANES REFER TO 10009916

	DATE	NAME	DOCUMENT NO.	
DFTR.	29.11.2021	BUTERUS	SED 8367934 001 01	
CHKD.	02.12.2021	WREDE	CHANGE NO.	SCALE
STAND.	02.12.2021	WANNINGER	1111654	1:10

DIMENSION IN mm EXCEPT AS NOTED

ON-LOAD TAP-CHANGER VACUTAP® VR®
VRL I 2601/3001/3201 – 72,5...420 – RC/RD/RDE
DIMENSION DRAWING

SERIAL NUMBER

MATERIAL NUMBER 101624740E

SHEET 1/2

© MASCHINENFABRIK REINHAUSEN GMBH 2020
THE REPRODUCTION, DISTRIBUTION AND UTILIZATION OF THIS DOCUMENT AS WELL AS THE COMMUNICATION OF ITS CONTENTS TO OTHERS WITHOUT EXPRESS AUTHORIZATION IS PROHIBITED. OFFENDERS WILL BE HELD LIABLE FOR THE PAYMENT OF DAMAGES. ALL RIGHTS RESERVED IN THE EVENT OF THE GRANT OF A PATENT, UTILITY MODEL OR DESIGN.

VACUTAP® VRL I 2601 / 3001 / 3201

SELECTOR SIZE		RC						
Um [kV]		72,5	123	170	245	300	362	420
DIMENSIONS [mm]	h	2681	2811	2941	3041	3193	3296	3415
	b	543	543	543	543	543	543	543
	i	1412	1542	1672	1772	1924	2027	2146
	s	–	–	302	402	554	573	692
	z	–	–	191	191	191	228	228
	x	–	–	Ø 620	Ø 620	Ø 620	Ø 695	Ø 695
	y	–	–	Ø 56	Ø 56	Ø 56	Ø 100	Ø 100
	k	1269						
	n	319						
	o	150						
	t	170						
	r	150						
	q	789						
OIL VOLUME [dm³]		185	210	230	250	265	300	320
DISPLACEMENT [dm³]		312	342	372	392	517	462	482
MAX. WEIGHT [kg]		582	590	602	605	613	620	624

VACUTAP® VRL I 2601 / 3001 / 3201

SELECTOR SIZE		RD / RDE						
Um [kV]		72,5	123	170	245	300	362	420
DIMENSIONS [mm]	h	2761	2891	3021	3121	3273	3376	3495
	b	543	543	543	543	543	543	543
	i	1412	1542	1672	1772	1924	2027	2146
	s	–	–	302	402	554	573	692
	z	–	–	191	191	191	228	228
	x	–	–	Ø 620	Ø 620	Ø 620	Ø 695	Ø 695
	y	–	–	Ø 56	Ø 56	Ø 56	Ø 100	Ø 100
	k	1349						
	n	359						
	o	150						
	t	210						
	r	150						
	q	869						
OIL VOLUME [dm³]		185	210	230	250	275	300	320
DISPLACEMENT [dm³]		313	343	373	393	428	463	483
MAX. WEIGHT [kg]		588	596	608	611	619	626	630

	DATE	NAME	DOCUMENT NO.	
DFTR.	29.11.2021	BUTERUS	SED 8367934 001 01	
CHKD.	02.12.2021	WREDE	CHANGE NO.	SCALE
STAND.	02.12.2021	WANNINGER	1111654	1:10

DIMENSION IN mm EXCEPT AS NOTED

ON-LOAD TAP-CHANGER VACUTAP® VR®
VRL I 2601/3001/3201 – 72,5...420 – RC/RD/RDE
DIMENSION DRAWING

SERIAL NUMBER

MATERIAL NUMBER 101624740E

SHEET 2/2

© MASCHINENFABRIK REINHAUSEN GMBH 2020
THE REPRODUCTION, DISTRIBUTION AND UTILIZATION OF THIS DOCUMENT AS WELL AS THE COMMUNICATION OF ITS CONTENTS TO OTHERS WITHOUT EXPRESS AUTHORIZATION IS PROHIBITED. OFFENDERS WILL BE HELD LIABLE FOR THE PAYMENT OF DAMAGES. ALL RIGHTS RESERVED IN THE EVENT OF THE GRANT OF A PATENT, UTILITY MODEL OR DESIGN.

WITHOUT CHANGE-OVER SELECTOR	0

WITH CHANGE-OVER SELECTOR (REVERSING / COARSE CHANGE-OVER SELECTOR)	W, G

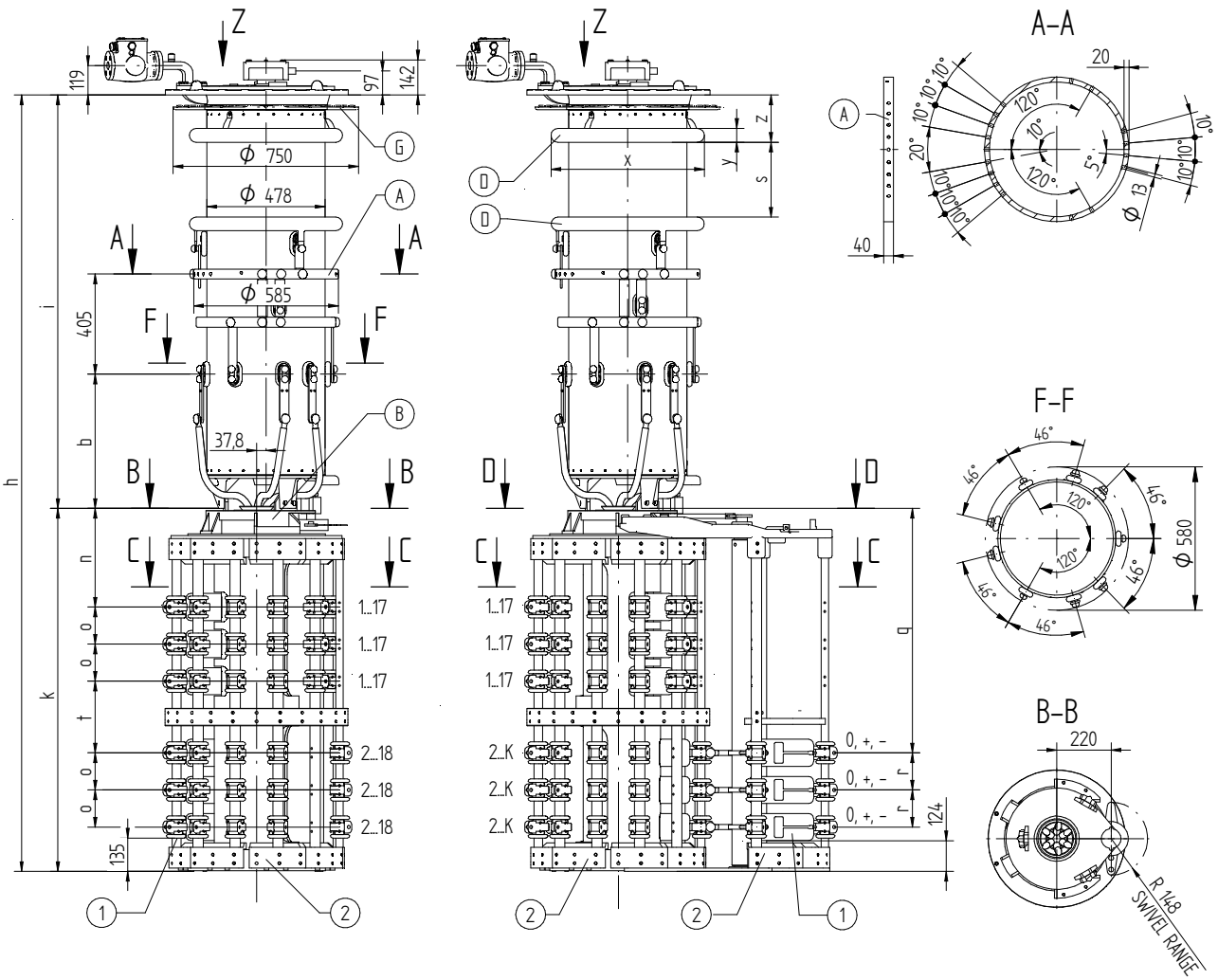

FOR THE TYPE OF THE OLTC-HEAD REFER TO THE ORDER-SPECIFIC DRAWING OF THE OLTC-HEAD AND DRIVE SHAFTS

(M) – DRIVE SIDE OF SELECTOR
(A) – ON-LOAD TAP-CHANGER CURRENT TAKE-OFF TERMINAL
(B) – IS CONNECTED TO POTENTIAL OF (A)
(D) – SHIELDING RINGS FOR UM OF 170 kV OR GREATER
(G) – SUPPORTING FLANGE FOR THE BELL-TYPE TANK INSTALLATION IS OPTIONAL
(1) – BOTTOM-MOST LIVE PARTS; THESE ARE CONNECTED TO THE POTENTIAL OF THE ASSOCIATED AND/OR WIRED CONNECTION CONTACT
(2) – SELECTOR BASE IS MADE OF INSULATING MATERIAL

– THE DETAILED CONNECTION DIAGRAM IS BINDING FOR THE DESIGNATION OF THE CONNECTION CONTACTS AND PHASES
– C-C: REFER TO 10016570
– D-D: TYPE WITH CONNECTING LEAD 3W/3G REFER TO 10017264
– CONNECTING OF PARALLEL SELECTOR PLANES REFER TO 10009916

	DATE	NAME	DOCUMENT NO.	
DFTR.	29.11.2021	BUTERUS	SED 8367950 001 01	
CHK'D.	02.12.2021	WREDE	CHANGE NO.	SCALE
STAND.	02.12.2021	WANNINGER	1111654	1:10

DIMENSION IN mm EXCEPT AS NOTED

ON-LOAD TAP-CHANGER VACUTAP® VR®
VRL I 2601/3001/3201 – 72,5...420 – RE
DIMENSION DRAWING

SERIAL NUMBER

MATERIAL NUMBER 101624750E

SHEET 1/2

VACUTAP® VRL I 2601 / 3001 / 3201

SELECTOR SIZE		RE						
Um [kV]		72,5	123	170	245	300	362	420
DIMENSIONS [mm]	h	2882	3012	3142	3242	3394	3497	3616
	b	543	543	543	543	543	543	543
	i	1412	1542	1672	1772	1924	2027	2146
	s	–	–	302	402	554	573	692
	z	–	–	191	191	191	228	228
	x	–	–	Ø 620	Ø 620	Ø 620	Ø 695	Ø 695
	y	–	–	Ø 56	Ø 56	Ø 56	Ø 100	Ø 100
	k	1470						
	n	400						
	o	150						
	t	290						
	r	150						
	q	990						
OIL VOLUME [dm³]		185	210	230	250	275	300	320
DISPLACEMENT [dm³]		351	381	411	431	466	501	521
MAX. WEIGHT [kg]		696	704	716	719	727	734	738

© MASCHINENFABRIK REINHAUSEN GMBH 2020
THE REPRODUCTION, DISTRIBUTION AND UTILIZATION OF THIS DOCUMENT AS WELL AS THE COMMUNICATION OF ITS CONTENTS TO OTHERS WITHOUT EXPRESS AUTHORIZATION IS PROHIBITED. OFFENDERS WILL BE HELD LIABLE FOR THE PAYMENT OF DAMAGES. ALL RIGHTS RESERVED IN THE EVENT OF THE GRANT OF A PATENT, UTILITY MODEL OR DESIGN.

	DATE	NAME	DOCUMENT NO.	
DFTR.	29.11.2021	BUTERUS	SED 8367950 001 01	
CHKD.	02.12.2021	WREDE	CHANGE NO.	SCALE
STAND.	02.12.2021	WANNINGER	1111654	1:10

DIMENSION IN mm EXCEPT AS NOTED

ON-LOAD TAP-CHANGER VACUTAP® VR®
VRL I 2601/3001/3201 – 72,5...420 – RE
DIMENSION DRAWING

SERIAL NUMBER

MATERIAL NUMBER 101624750E

SHEET 2/2

4.3 設置図

MASCHINENFABRIK REINHAUSEN GMBH COPYRIGHT RESERVED
THE REPRODUCTION, DISTRIBUTION AND UTILIZATION OF THIS DOCUMENT AS WELL AS THE COMMUNICATION OF ITS CONTENTS TO OTHERS WITHOUT EXPRESS AUTHORIZATION IS PROHIBITED. OFFENDERS WILL BE HELD LIABLE FOR THE PAYMENT OF DAMAGES. ALL RIGHTS RESERVED IN THE EVENT OF THE GRANT OF A PATENT, UTILITY MODEL OR DESIGN.

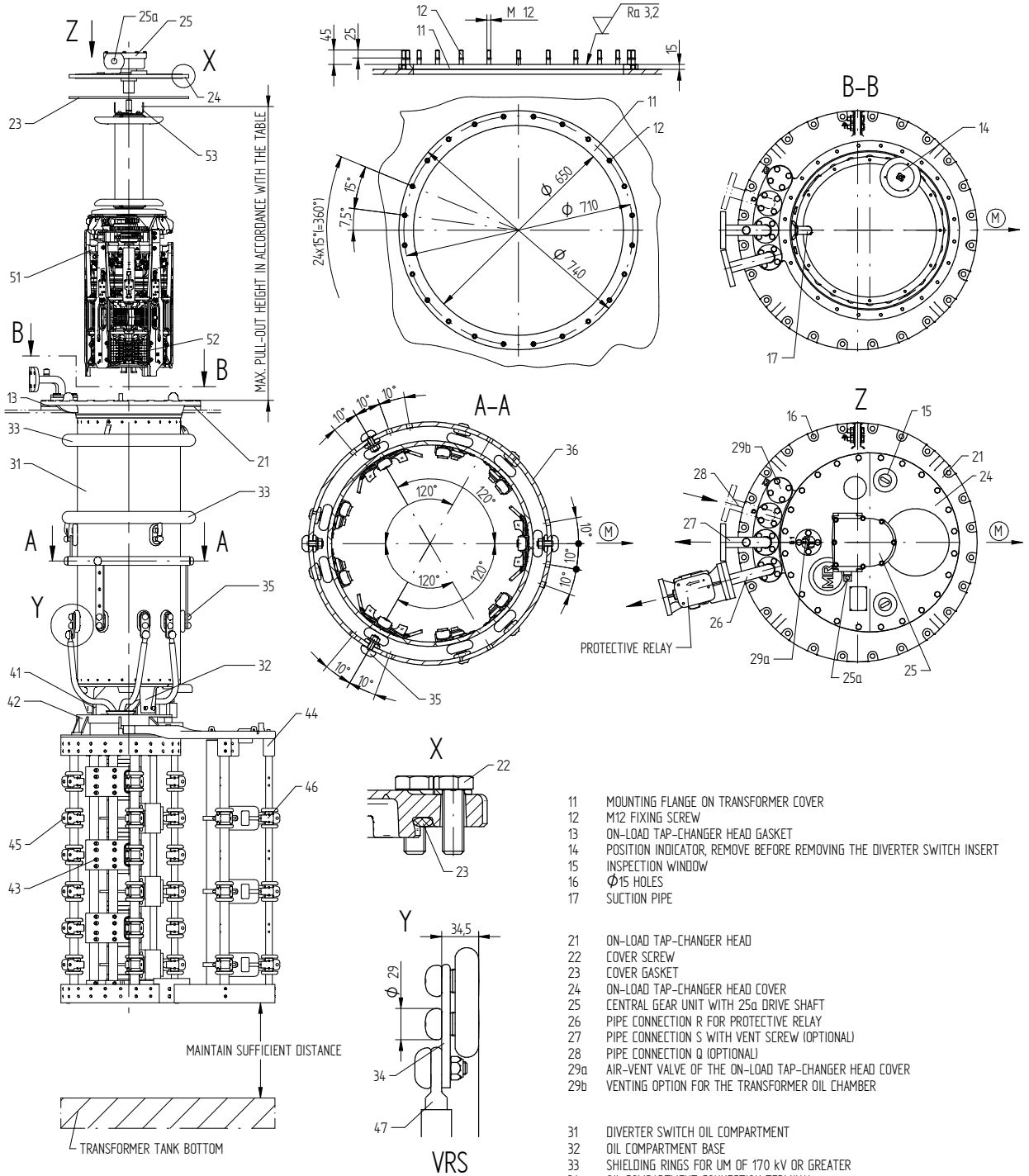

Um [kV]	MAX. PULL-OUT HEIGHT [mm]		
	SELECTOR SIZE		
	VRS	VR M/X/H650	VR L/H1300 VRL I 1601
72,5	1200	1350	1500
123	1330	1480	1630
170	1460	1610	1760
245	1560	1710	1860
300	1712	1862	2012
362	1815	1965	2115
420	1934	2084	2234

11 MOUNTING FLANGE ON TRANSFORMER COVER
12 M12 FIXING SCREW
13 ON-LOAD TAP-CHANGER HEAD GASKET
14 POSITION INDICATOR, REMOVE BEFORE REMOVING THE DIVERTER SWITCH INSERT
15 INSPECTION WINDOW
16 Φ15 HOLES
17 SUCTION PIPE

21 ON-LOAD TAP-CHANGER HEAD
22 COVER SCREW
23 COVER GASKET
24 ON-LOAD TAP-CHANGER HEAD COVER
25 CENTRAL GEAR UNIT WITH 25a DRIVE SHAFT
26 PIPE CONNECTION R FOR PROTECTIVE RELAY
27 PIPE CONNECTION S WITH VENT SCREW (OPTIONAL)
28 PIPE CONNECTION Q (OPTIONAL)
29a AIR-VENT VALVE OF THE ON-LOAD TAP-CHANGER HEAD COVER
29b VENTING OPTION FOR THE TRANSFORMER OIL CHAMBER

31 DIVERTER SWITCH OIL COMPARTMENT
32 OIL COMPARTMENT BASE
33 SHIELDING RINGS FOR UM OF 170 kV OR GREATER
34 OIL COMPARTMENT CONNECTION TERMINAL
35 CONNECTION CONTACT FOR ON-LOAD TAP-CHANGER TAKE-OFF LEAD
36 TAKE-OFF RING FOR ON-LOAD TAP-CHANGER TAKE-OFF LEAD

41 SELECTOR SUSPENSION
42 SELECTOR GEAR
43 FINE TAP SELECTOR
44 CHANGE-OVER SELECTOR
45 SELECTOR CONNECTION CONTACTS (SEE ASSOCIATED DIMENSIONAL DRAWING)
46 CHANGE-OVER SELECTOR CONNECTION CONTACTS (SEE ASSOCIATED DIMENSIONAL DRAWING)
47 SELECTOR CONNECTING LEAD

} RC VARIANT DISPLAYED

51 DIVERTER SWITCH INSERT
52 TRANSITION RESISTANCES
53 EYEBOLT

M SELECTOR DRIVE SIDE

	DATE	NAME	DOCUMENT NO.	
DFTR.	26.07.2022	BUTERUS	SED 5127328 001 02	
CHKD.	27.07.2022	WREDE	CHANGE NO.	SCALE
STAND.	27.07.2022	KLEYN	1116192	-

DIMENSION IN mm EXCEPT AS NOTED

ON-LOAD TAP-CHANGER VACUTAP® VR®
INSTALLATION DRAWING VR S/M/L/H/X – RC/RD/RDE/RE/RF/RES
DIMENSION DRAWING

SERIAL NUMBER –
MATERIAL NUMBER 100177201E
SHEET 1/1

MASCHINENFABRIK REINHAUSEN GMBH COPYRIGHT RESERVED
THE REPRODUCTION, DISTRIBUTION AND UTILIZATION OF THIS DOCUMENT AS WELL AS THE COMMUNICATION OF ITS CONTENTS TO OTHERS WITHOUT EXPRESS AUTHORIZATION IS PROHIBITED. OFFENDERS WILL BE HELD LIABLE FOR THE PAYMENT OF DAMAGES. ALL RIGHTS RESERVED IN THE EVENT OF THE GRANT OF A PATENT, UTILITY MODEL OR DESIGN.

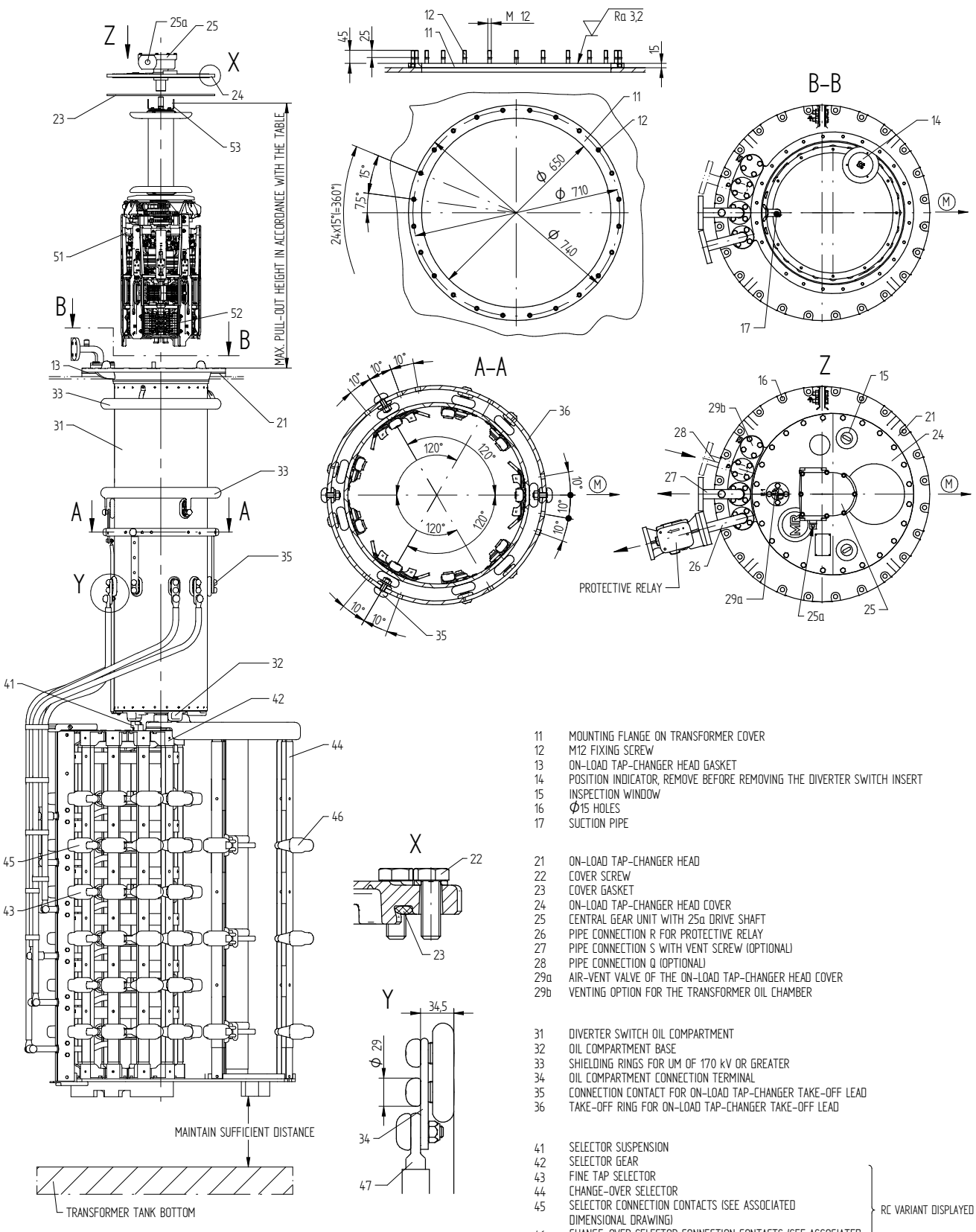

Um [kV]	MAX. PULL-OUT HEIGHT [mm]
	SELECTOR SIZE E
72,5	1500
123	1630
170	1760
245	1860

11 MOUNTING FLANGE ON TRANSFORMER COVER
12 M12 FIXING SCREW
13 ON-LOAD TAP-CHANGER HEAD GASKET
14 POSITION INDICATOR, REMOVE BEFORE REMOVING THE DIVERTER SWITCH INSERT
15 INSPECTION WINDOW
16 Φ15 HOLES
17 SUCTION PIPE

21 ON-LOAD TAP-CHANGER HEAD
22 COVER SCREW
23 COVER GASKET
24 ON-LOAD TAP-CHANGER HEAD COVER
25 CENTRAL GEAR UNIT WITH 25a DRIVE SHAFT
26 PIPE CONNECTION R FOR PROTECTIVE RELAY
27 PIPE CONNECTION S WITH VENT SCREW (OPTIONAL)
28 PIPE CONNECTION Q (OPTIONAL)
29a AIR-VENT VALVE OF THE ON-LOAD TAP-CHANGER HEAD COVER
29b VENTING OPTION FOR THE TRANSFORMER OIL CHAMBER

31 DIVERTER SWITCH OIL COMPARTMENT
32 OIL COMPARTMENT BASE
33 SHIELDING RINGS FOR UM OF 170 kV OR GREATER
34 OIL COMPARTMENT CONNECTION TERMINAL
35 CONNECTION CONTACT FOR ON-LOAD TAP-CHANGER TAKE-OFF LEAD
36 TAKE-OFF RING FOR ON-LOAD TAP-CHANGER TAKE-OFF LEAD

41 SELECTOR SUSPENSION
42 SELECTOR GEAR
43 FINE TAP SELECTOR
44 CHANGE-OVER SELECTOR
45 SELECTOR CONNECTION CONTACTS (SEE ASSOCIATED DIMENSIONAL DRAWING)
46 CHANGE-OVER SELECTOR CONNECTION CONTACTS (SEE ASSOCIATED DIMENSIONAL DRAWING)
} RC VARIANT DISPLAYED
47 SELECTOR CONNECTING LEAD

51 DIVERTER SWITCH INSERT
52 TRANSITION RESISTANCES
53 EYEBOLT

(M) SELECTOR DRIVE SIDE

	DATE	NAME	DOCUMENT NO.	
DFTR.	26.07.2022	BUTERUS	SED 8914339 001 00	
CHKD.	27.07.2022	WREDE	CHANGE NO.	SCALE
STAND.	27.07.2022	KLEYN	1116192	

DIMENSION IN mm EXCEPT AS NOTED

ON-LOAD TAP-CHANGER VACUTAP® VR®
INSTALLATION DRAWING VRL III 1600 – E
DIMENSION DRAWING

SERIAL NUMBER –

MATERIAL NUMBER 101714730E

SHEET 1/1

© MASCHINENFABRIK REINHAUSEN GMBH 2016
THE REPRODUCTION, DISTRIBUTION AND UTILIZATION OF THIS DOCUMENT AS WELL AS THE COMMUNICATION OF ITS CONTENTS TO OTHERS WITHOUT EXPRESS AUTHORIZATION IS PROHIBITED. OFFENDERS WILL BE HELD LIABLE FOR THE PAYMENT OF DAMAGES. ALL RIGHTS RESERVED IN THE EVENT OF THE GRANT OF A PATENT, UTILITY MODEL OR DESIGN.

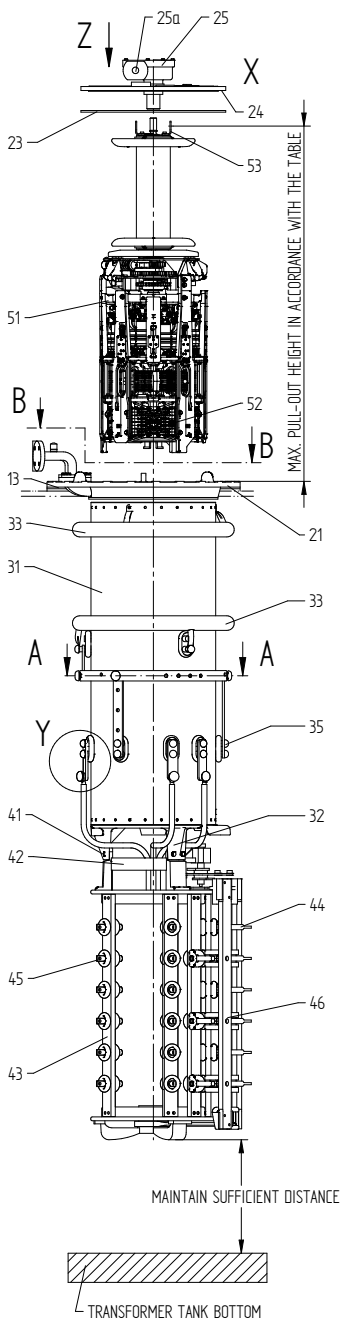

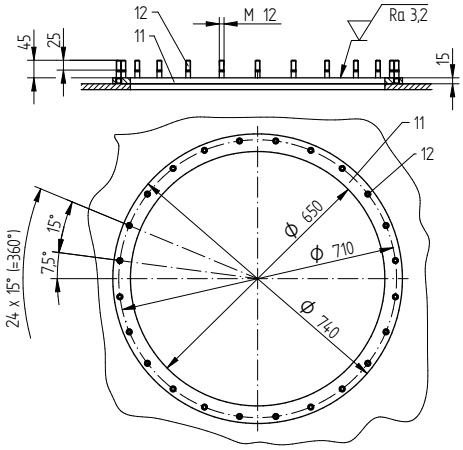

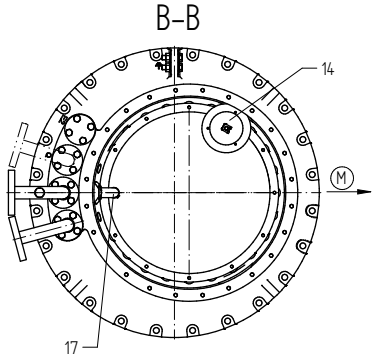

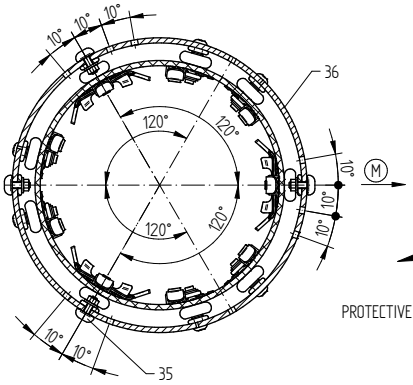

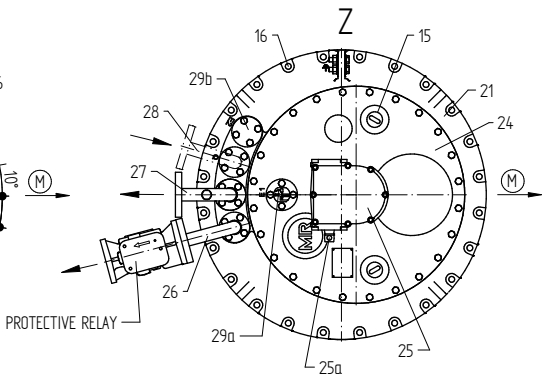

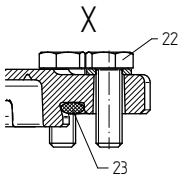

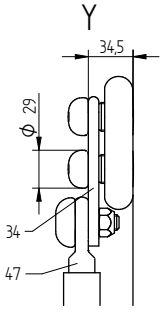

Um [kV]	MAX. PULL-OUT HEIGHT [mm]	
	SELECTOR SIZE	
	VRS	VRM
72,5	1200	1350
123	1330	1480
170	1460	1610
245	1560	1710
300	1712	1862
362	1815	1965
420	1934	2084

11 MOUNTING FLANGE ON TRANSFORMER COVER
12 M12 FIXING SCREW
13 ON-LOAD TAP-CHANGER HEAD GASKET
14 POSITION INDICATOR, REMOVE BEFORE REMOVING THE DIVERTER SWITCH INSERT
15 INSPECTION WINDOW
16 Ø15 HOLES
17 SUCTION PIPE

21 ON-LOAD TAP-CHANGER HEAD
22 COVER SCREW
23 COVER GASKET
24 ON-LOAD TAP-CHANGER HEAD COVER
25 CENTRAL GEAR UNIT WITH 25a DRIVE SHAFT
26 PIPE CONNECTION R FOR PROTECTIVE RELAY
27 PIPE CONNECTION S WITH VENT SCREW (OPTIONAL)
28 PIPE CONNECTION Q (OPTIONAL)
29a AIR-VENT VALVE OF THE ON-LOAD TAP-CHANGER HEAD COVER
29b VENTING OPTION FOR THE TRANSFORMER OIL CHAMBER

31 DIVERTER SWITCH OIL COMPARTMENT
32 OIL COMPARTMENT BASE
33 SHIELDING RINGS FOR UM OF 170 kV OR GREATER
34 OIL COMPARTMENT CONNECTION TERMINAL
35 CONNECTION CONTACT FOR ON-LOAD TAP-CHANGER TAKE-OFF LEAD
36 TAKE-OFF RING FOR ON-LOAD TAP-CHANGER TAKE-OFF LEAD

41 SELECTOR SUSPENSION
42 SELECTOR GEAR
43 FINE TAP SELECTOR
44 CHANGE-OVER SELECTOR
45 SELECTOR CONNECTION CONTACTS (SEE ASSOCIATED DIMENSIONAL DRAWING)
46 CHANGE-OVER SELECTOR CONNECTION CONTACTS (SEE ASSOCIATED DIMENSIONAL DRAWING)
} C VARIANT DISPLAYED
47 SELECTOR CONNECTING LEAD

51 DIVERTER SWITCH INSERT
52 TRANSITION RESISTANCES
53 EYEBOLT

Ⓜ → SELECTOR DRIVE SIDE

	DATE	NAME	DOCUMENT NO.	
DFTR.	06.03.2017	BUTERUS	SED 5128712 001 01	
CHKD.	06.03.2017	WREDE	CHANGE NO.	SCALE
STAND.	06.03.2017	PRODASTSCHUK	1080566	-

DIMENSION IN mm EXCEPT AS NOTED

ON-LOAD TAP-CHANGER VACUTAP® VR
INSTALLATION DRAWING VR S/M – B/C/D/DE
DIMENSION DRAWING

SERIAL NUMBER
–
MATERIAL NUMBER 100177380E
SHEET 1/1

© MASCHINENFABRIK REINHAUSEN GMBH 2020
THE REPRODUCTION, DISTRIBUTION AND UTILIZATION OF THIS DOCUMENT AS WELL AS THE COMMUNICATION OF ITS CONTENTS TO OTHERS WITHOUT EXPRESS AUTHORIZATION IS PROHIBITED. OFFENDERS WILL BE HELD LIABLE FOR THE PAYMENT OF DAMAGES. ALL RIGHTS RESERVED IN THE EVENT OF THE GRANT OF A PATENT, UTILITY MODEL OR DESIGN.

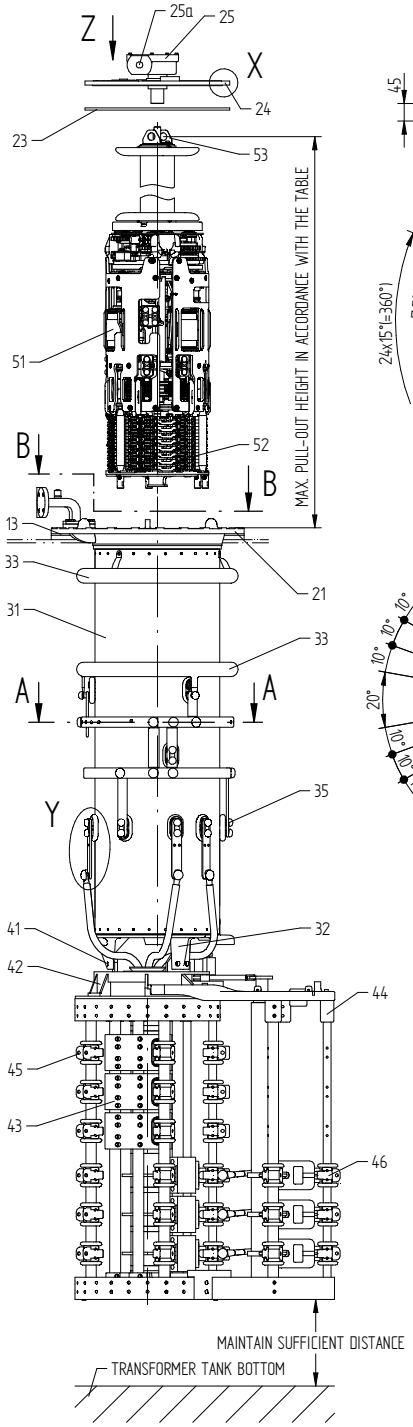

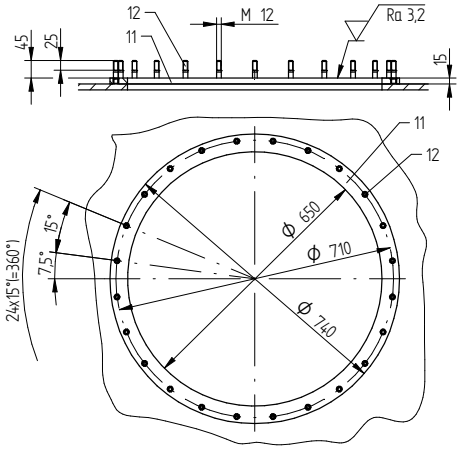

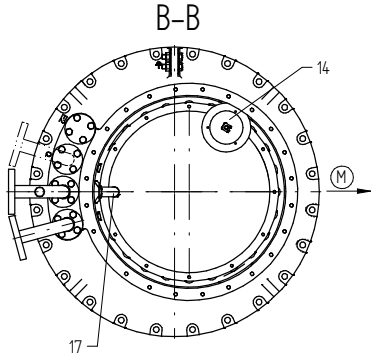

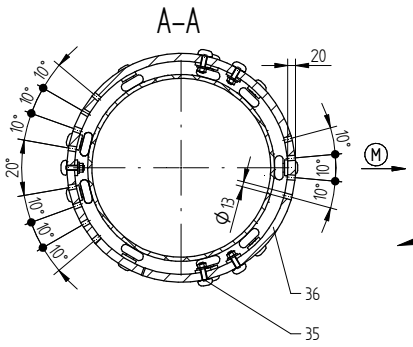

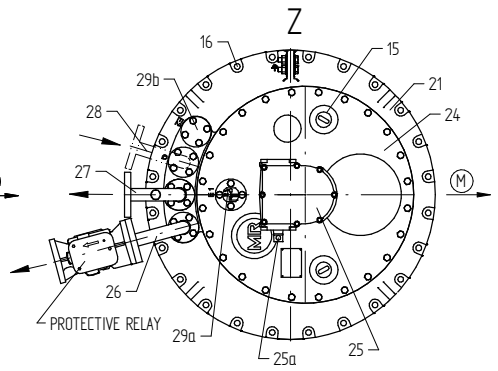

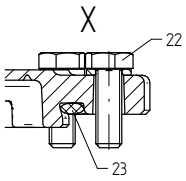

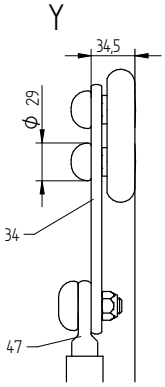

Um [kV]	MAX. PULL-OUT HEIGHT [mm]
72,5	1350
123	1480
170	1610
245	1710
300	1860
362	1970
420	2090

11 MOUNTING FLANGE ON TRANSFORMER COVER
12 M12 FIXING SCREW
13 ON-LOAD TAP-CHANGER HEAD GASKET
14 TAP POSITION INDICATOR, REMOVE BEFORE REMOVING THE DIVERTER SWITCH INSERT
15 INSPECTION WINDOW
16 Φ15 HOLES
17 SUCTION PIPE

21 ON-LOAD TAP-CHANGER HEAD
22 COVER BOLT
23 COVER GASKET
24 ON-LOAD TAP-CHANGER HEAD COVER
25 CENTRAL GEAR UNIT WITH 25a DRIVE SHAFT
26 PIPE CONNECTION R FOR PROTECTIVE RELAY
27 PIPE CONNECTION S WITH VENT SCREW (OPTIONAL)
28 PIPE CONNECTION Q (OPTIONAL)
29a AIR-VENT VALVE OF THE ON-LOAD TAP-CHANGER HEAD COVER
29b VENTING OPTION FOR THE TRANSFORMER OIL CHAMBER

31 DIVERTER SWITCH OIL COMPARTMENT
32 OIL COMPARTMENT BASE
33 SHIELDING RINGS FOR UM OF 170 kV OR GREATER
34 OIL COMPARTMENT CONNECTION TERMINAL
35 CONNECTION CONTACT FOR ON-LOAD TAP-CHANGER TAKE-OFF LEAD
36 TAKE-OFF RING FOR ON-LOAD TAP-CHANGER TAKE-OFF LEAD

41 SELECTOR SUSPENSION
42 SELECTOR GEAR
43 TAP SELECTOR
44 CHANGE-OVER SELECTOR
45 SELECTOR CONNECTION CONTACTS (SEE ASSOCIATED DIMENSION DRAWING)
46 CHANGE-OVER SELECTOR CONNECTION CONTACTS (SEE ASSOCIATED DIMENSION DRAWING)
} RC VARIANT DISPLAYED
47 SELECTOR CONNECTING LEAD

51 DIVERTER SWITCH INSERT
52 TRANSITION RESISTORS
53 EYEBOLT

M SELECTOR DRIVE SIDE

	DATE	NAME	DOCUMENT NO.	
DFTR.	08.12.2021	BUTERUS	SED 8367971 001 02	
CHKD.	08.12.2021	SCHMIDTE	CHANGE NO.	SCALE
STAND.	08.12.2021	WANNINGER	1111654	1:10

DIMENSION IN mm EXCEPT AS NOTED

ON-LOAD TAP-CHANGER VACUTAP® VR®
VRL I 1801 ... 3201 – RC/RD/RDE/RE
INSTALLATION DRAWING

SERIAL NUMBER

MATERIAL NUMBER 101624730E

SHEET 1/1

4.4 負荷時タップ切換器（OLTC)ヘッド

© MASCHINENFABRIK REINHAUSEN GMBH 2018
THE REPRODUCTION, DISTRIBUTION AND UTILIZATION OF THIS DOCUMENT AS WELL AS THE COMMUNICATION OF ITS CONTENTS TO OTHERS WITHOUT EXPRESS AUTHORIZATION IS PROHIBITED. OFFENDERS WILL BE HELD LIABLE FOR THE PAYMENT OF DAMAGES. ALL RIGHTS RESERVED IN THE EVENT OF THE GRANT OF A PATENT, UTILITY MODEL OR DESIGN.

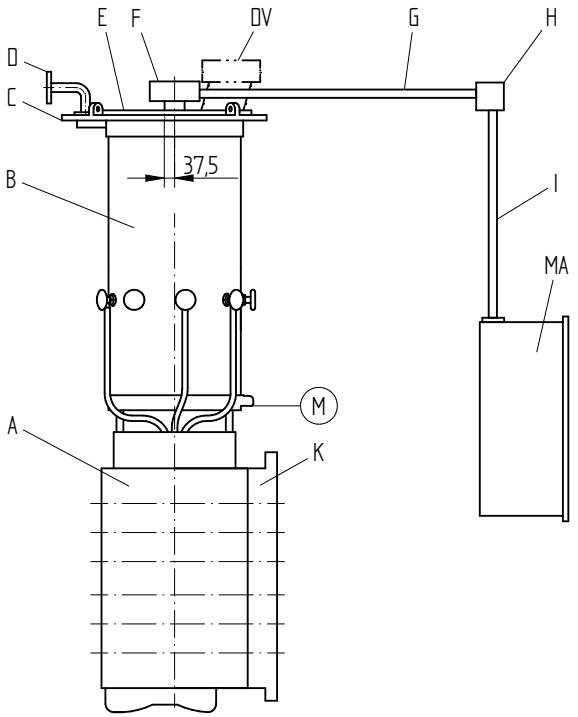

A = selector
K = change-over selector
B = diverter switch oil compartment
} represented version type M

C = on-load tap-changer head
D = pipe connections (R, S, Q, E2)
DV = pressure relief device
E = on-load tap-changer head cover
F = upper gear unit
G = drive shaft, horizontal
H = bevel gear
I = drive shaft, vertical
MA = motor-drive unit
(M) = drive side of selector
SR = inspection window on the right
SL = inspection window on the left
T = temperature sensor

Position of drive shaft of gear unit

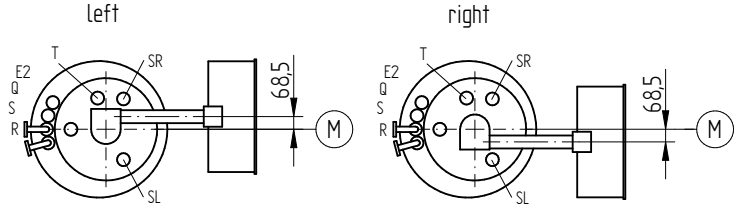

Head variants

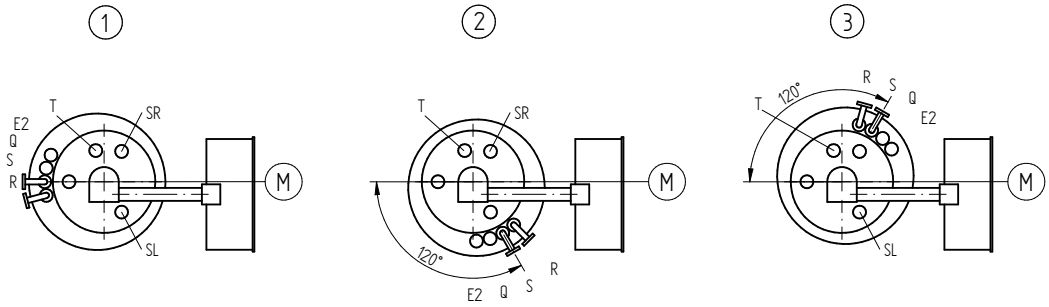

Swivel ranges

A considerabel number of variants of the on-load tap-changer head are available for adapting the horizontal part of the drive shaft to the transformer tank.

The mounting position of the selector A and diverter switch oil compartment B is determined by the drive side of selector (M).

The on-load tap-changer head C together with its pipe connections D may be turned through 120 degrees clockwise or anti-clockwise. This results in the variants 1, 2 and 3.

The upper gear unit F can be turned continuously on its own axis. Table 720027: lists the limitation of the swivel range for the particular head variant. The angel specifications refer to the center of rotation of the gear unit. Pay particular attention to the offset of the drive shaft.

	DATE	NAME	DOCUMENT NO.	
DFTR.	11.07.2018	BUTERUS	SED 1063796 001 05	
CHKD.	16.07.2018	WILHELM	CHANGE NO.	SCALE
STAND.	16.07.2018	PRODASTSCHUK	1086956	-

DIMENSION IN mm EXCEPT AS NOTED

ON-LOAD TAP-CHANGER
OILTAP® MS, M, RM, R AND VACUTAP® VR®, VM®, VMS®
VARIANTS OF THE ON-LOAD TAP-CHANGER HEAD

SERIAL NUMBER

MATERIAL NUMBER 7200264E

SHEET 1/1

A2

© MASCHINENFABRIK REINHAUSEN GMBH 2018
THE REPRODUCTION, DISTRIBUTION AND UTILIZATION OF THIS DOCUMENT AS WELL AS THE COMMUNICATION OF ITS CONTENTS TO OTHERS WITHOUT EXPRESS AUTHORIZATION IS PROHIBITED. OFFENDERS WILL BE HELD LIABLE FOR THE PAYMENT OF DAMAGES. ALL RIGHTS RESERVED IN THE EVENT OF THE GRANT OF A PATENT, UTILITY MODEL OR DESIGN.

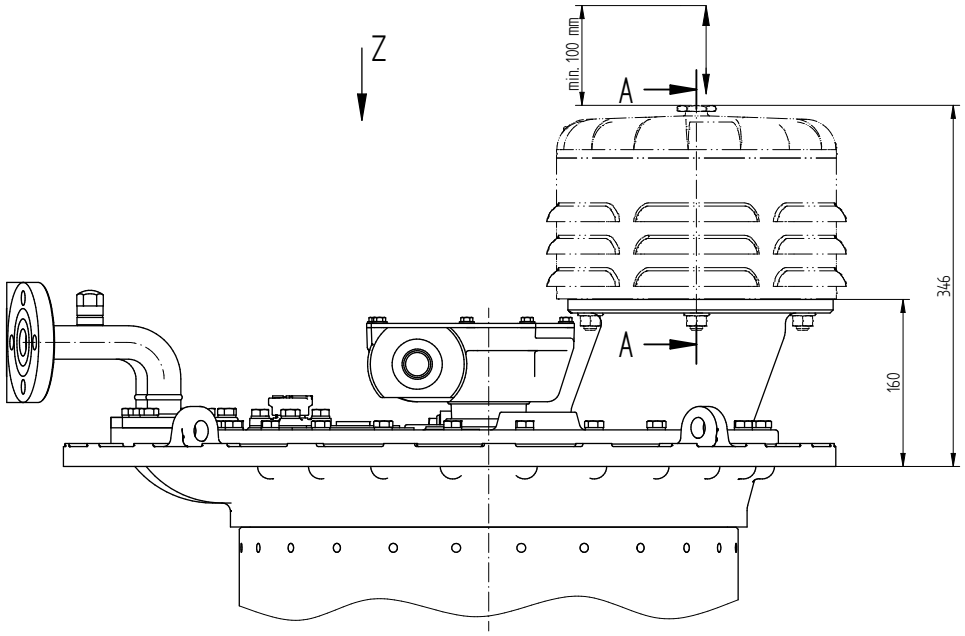

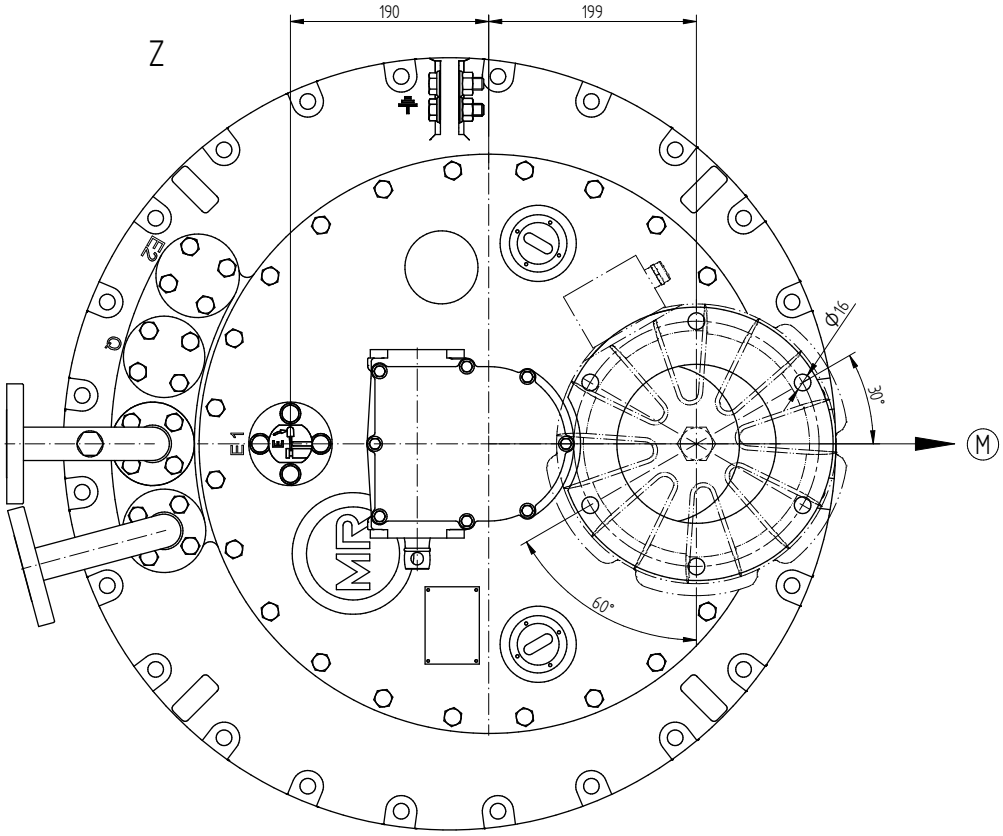

A–A
1:1

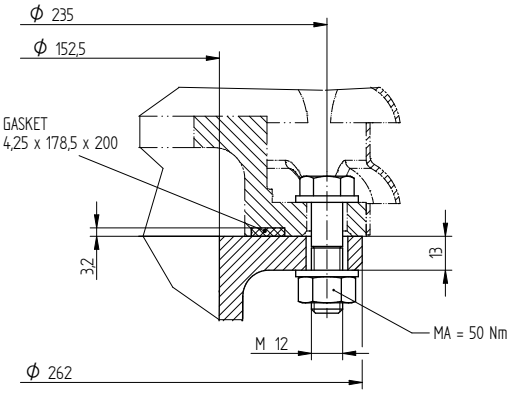

(M) DRIVE SIDE OF SELECTOR

	DATE	NAME	DOCUMENT NO.	
DFTR.	11.07.2018	BUTERUS	SED 1661250 001 03	
CHKD.	16.07.2018	WILHELM	CHANGE NO.	SCALE
STAND.	16.07.2018	PRODASTSCHUK	1086956	1:2,5

DIMENSION IN mm EXCEPT AS NOTED

ON-LOAD TAP-CHANGER
OILTAP® M, MS, R, RM AND VACUTAP® VR®, VM®, VMS® WITH MOUNTING FLANGE FOR PRESSURE RELIEF DEVICE

SERIAL NUMBER

MATERIAL NUMBER 8951689E

SHEET 1/1

© MASCHINENFABRIK REINHAUSEN GMBH 2018
THE REPRODUCTION, DISTRIBUTION AND UTILIZATION OF THIS DOCUMENT AS WELL AS THE COMMUNICATION OF ITS CONTENTS TO OTHERS WITHOUT EXPRESS AUTHORIZATION IS PROHIBITED. OFFENDERS WILL BE HELD LIABLE FOR THE PAYMENT OF DAMAGES. ALL RIGHTS RESERVED IN THE EVENT OF THE GRANT OF A PATENT, UTILITY MODEL OR DESIGN.

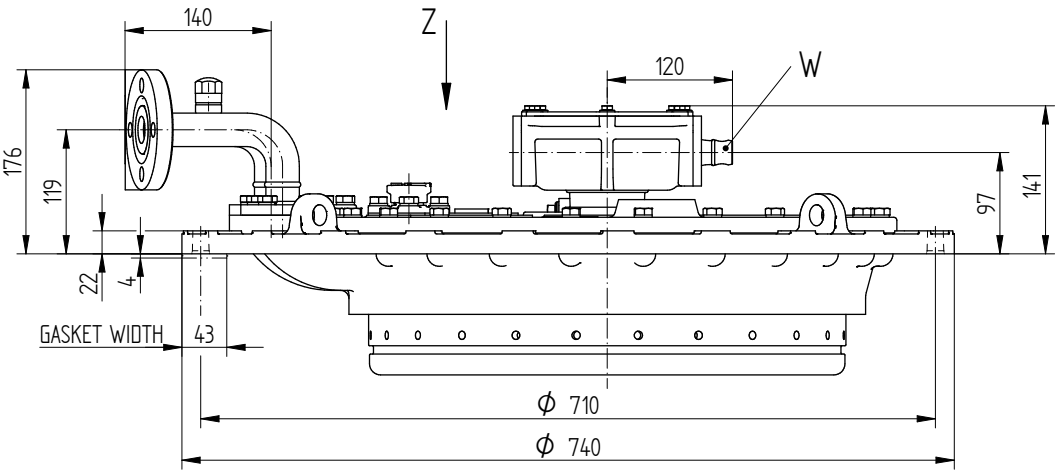

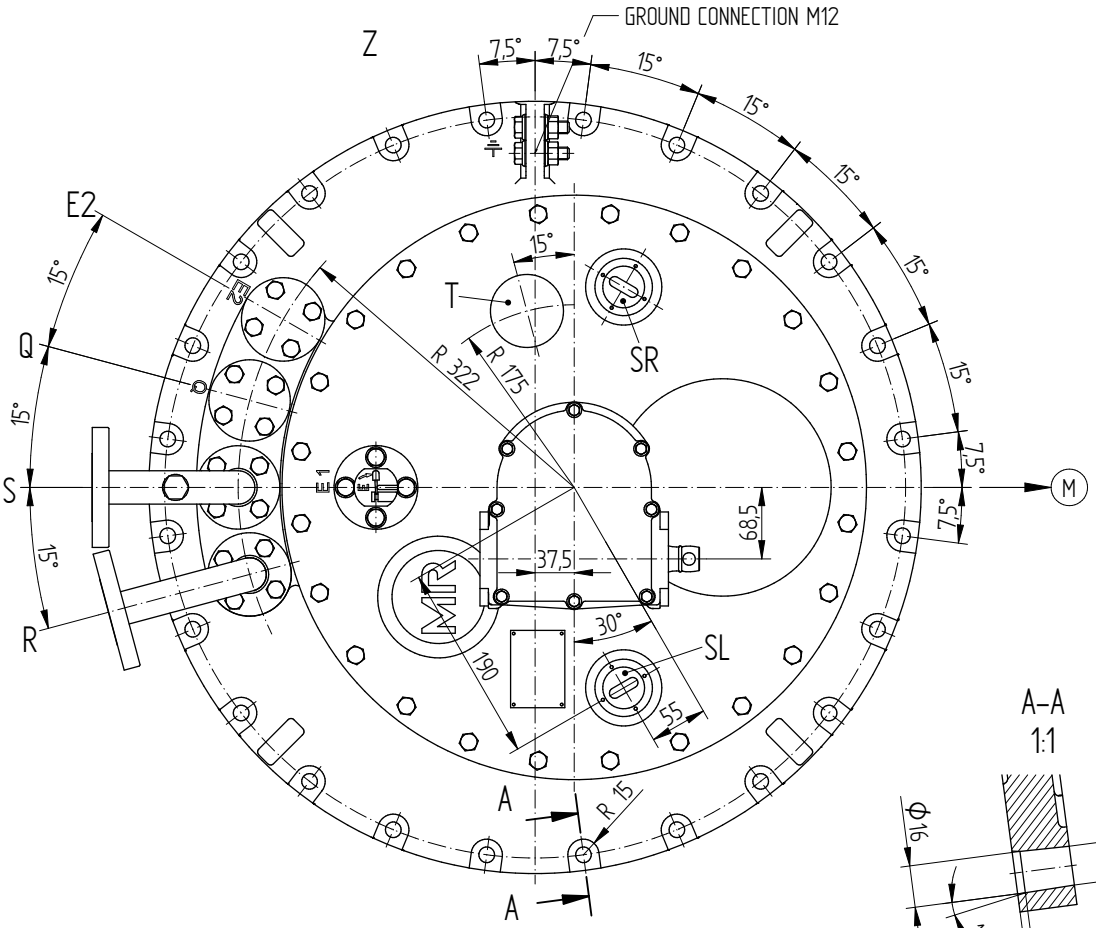

E1 = BLEEDING FACILITY FOR ON-LOAD TAP-CHANGER HEAD
E2 = BLEEDING FACILITY FOR SPACE UNDER THE HEAD OUTSIDE
THE TAP-CHANGER OIL COMPARTMENT (SAME PIPE CONNECTION AS R, S, Q OR BLEEDER SCREW CAN BE USED)
Q = CONNECTION FOR OIL RETURN PIPE OR TAP-CHANGE SUPERVISORY CONTROL
S = CONNECTION FOR SUCTION PIPE
R = CONNECTION FOR PROTECTIVE RELAY (EXCHANGEABLE WITH CONNECTION Q)
CONNECTIONS SWIVELING
DIMENSIONS AND SELECTION 899496: / 899497:
T = THERMOMETER BAG / TEMPERATURE SENSOR (OPTIONALLY)
SR = INSPECTION WINDOW, RIGHT
SL = INSPECTION WINDOW, LEFT
W = DRIVE SHAFT
(M) DRIVE SIDE OF SELECTOR

	DATE	NAME	DOCUMENT NO.	
DFTR.	11.07.2018	BUTERUS	SED 1661272 001 04	
CHKD.	16.07.2018	WILHELM	CHANGE NO.	SCALE
STAND.	16.07.2018	PRODASTSCHUK	1086956	1:2.5

DIMENSION IN mm EXCEPT AS NOTED

ON-LOAD TAP-CHANGER
OILTAP® M, MS, R, RM AND VACUTAP® VR®, VM®, VMS®
ON-LOAD TAP-CHANGER HEAD, CENTRIC DRIVE

SERIAL NUMBER

MATERIAL NUMBER 893899FE

SHEET 1/1

© MASCHINENFABRIK REINHAUSEN GMBH 2016
THE REPRODUCTION, DISTRIBUTION AND UTILIZATION OF THIS DOCUMENT AS WELL AS THE COMMUNICATION OF ITS CONTENTS TO OTHERS WITHOUT EXPRESS AUTHORIZATION IS PROHIBITED. OFFENDERS WILL BE HELD LIABLE FOR THE PAYMENT OF DAMAGES. ALL RIGHTS RESERVED IN THE EVENT OF THE GRANT OF A PATENT, UTILITY MODEL OR DESIGN.

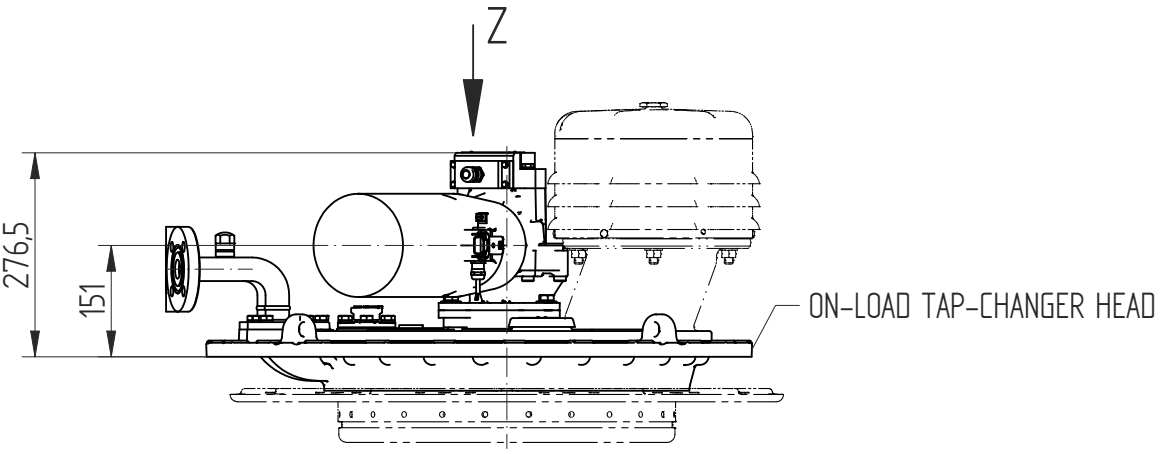

HEAD VARIATION 1

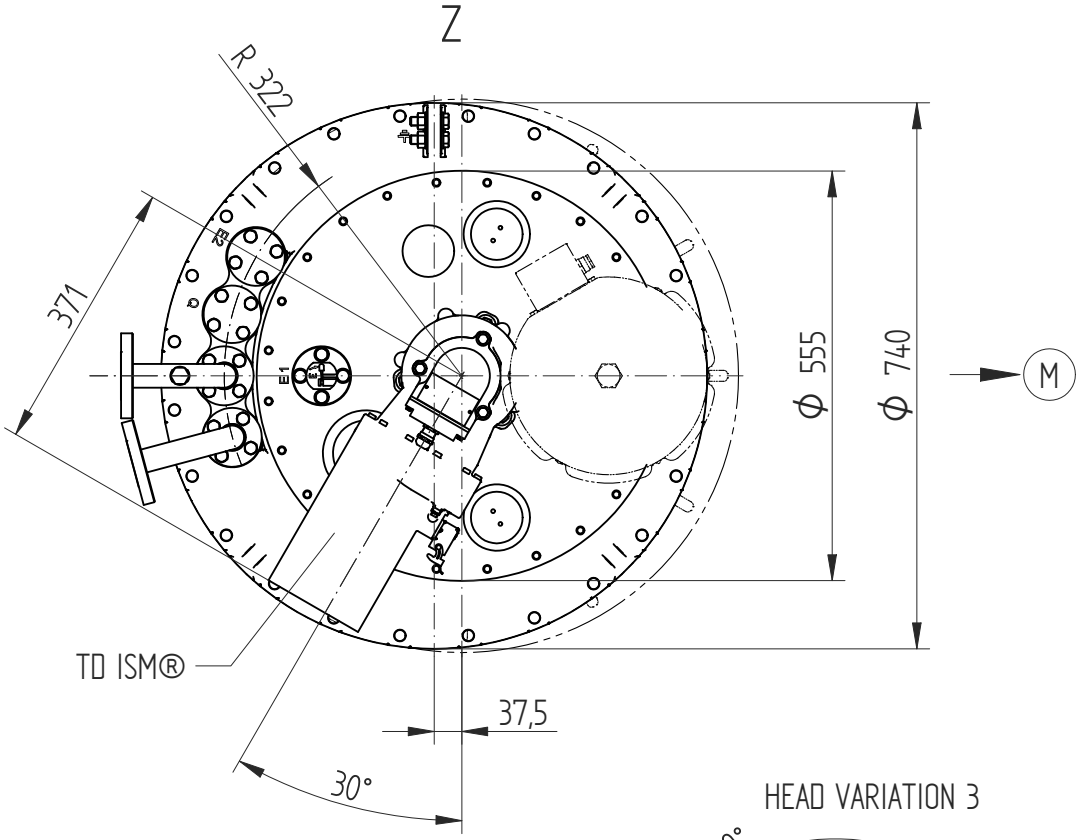

HEAD VARIATION 2

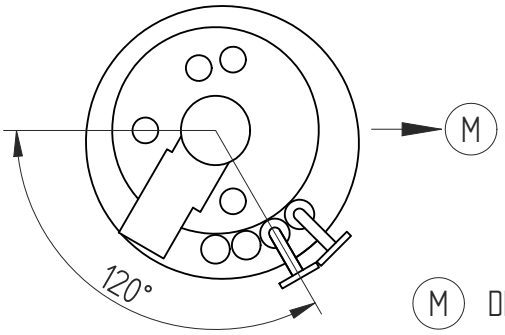

HEAD VARIATION 3

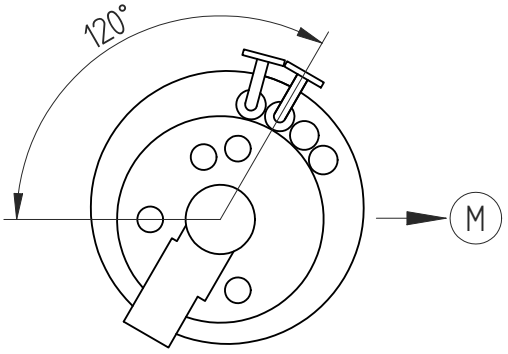

(M) DRIVE SIDE OF SELECTOR

	DATE	NAME	DOCUMENT NO.	
DFTR.	15.09.2016	RAEDLINGER	SED 4430490 000 03	
CHKD.	15.09.2016	NERRETER	CHANGE NO.	SCALE
STAND.	15.09.2016	PRODASTSCHUK	1077279	1:5

DIMENSION IN mm EXCEPT AS NOTED

MOTOR-DRIVE UNIT TAPMOTION® TD
MOTOR-DRIVE UNIT TD ISM® FOR OLTC VM® AND VR
DIMENSION DRAWING

SERIAL NUMBER

MATERIAL NUMBER 100110232E

SHEET 1/1

A2

© MASCHINENFABRIK REINHAUSEN GMBH 2019
THE REPRODUCTION, DISTRIBUTION AND UTILIZATION OF THIS DOCUMENT AS WELL AS THE COMMUNICATION OF ITS CONTENTS TO OTHERS WITHOUT EXPRESS AUTHORIZATION IS PROHIBITED. OFFENDERS WILL BE HELD LIABLE FOR THE PAYMENT OF DAMAGES. ALL RIGHTS RESERVED IN THE EVENT OF THE GRANT OF A PATENT, UTILITY MODEL OR DESIGN.

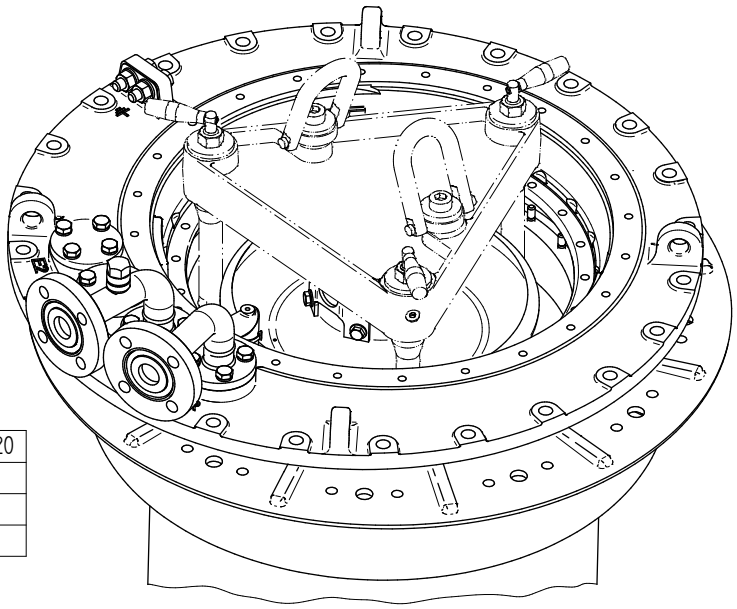

Um [kV]		170 / 245 / 300	362 / 420
DIMENSION [mm]	a	ø56	ø100
	b	148	185
	c	ø620	ø695

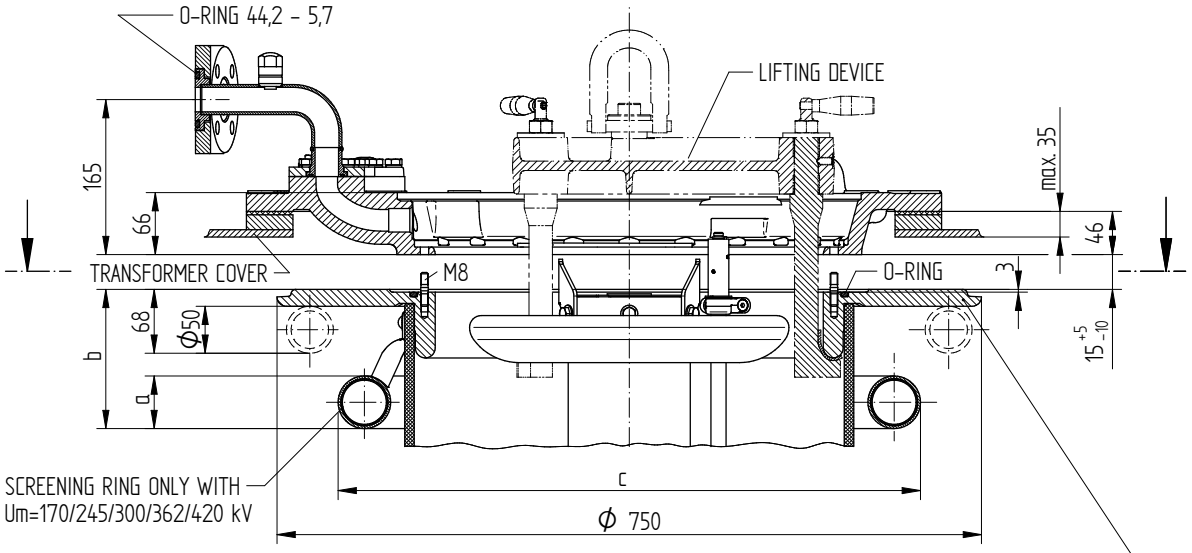

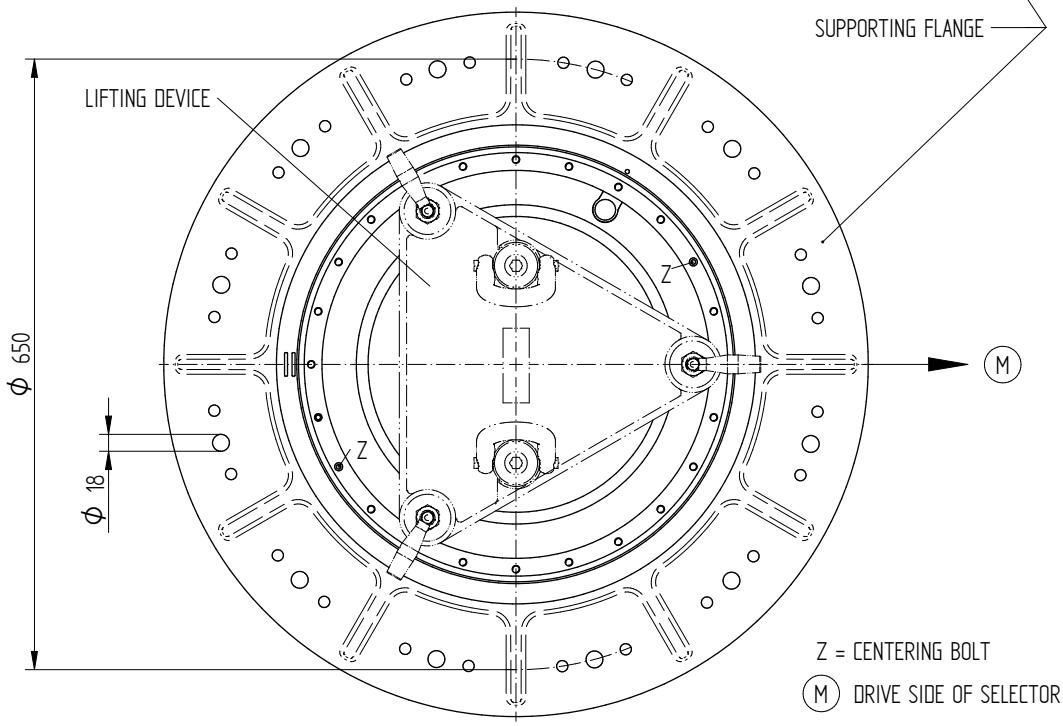

	DATE	NAME	DOCUMENT NO.	
DFTR.	15.03.2019	RAEDLINGER	SEO 1324074 001 03	
CHKD.	22.03.2019	NERRETER	CHANGE NO.	SCALE
STAND.	25.03.2019	KLEYN	1093087	-

DIMENSION IN mm EXCEPT AS NOTED

ON-LOAD TAP-CHANGER VACUTAP® VR
SPECIAL DESIGN BELL-TYPE TANK INSTALLATION

SERIAL NUMBER

MATERIAL NUMBER 7207812E

SHEET 1/1

© MASCHINENFABRIK REINHAUSEN GMBH 2018
THE REPRODUCTION, DISTRIBUTION AND UTILIZATION OF THIS DOCUMENT AS WELL AS THE COMMUNICATION OF ITS CONTENTS TO OTHERS WITHOUT EXPRESS AUTHORIZATION IS PROHIBITED. OFFENDERS WILL BE HELD LIABLE FOR THE PAYMENT OF DAMAGES. ALL RIGHTS RESERVED IN THE EVENT OF THE GRANT OF A PATENT, UTILITY MODEL OR DESIGN.

SKETCH	HEAD VERSION COMPONENTS USED	LIMITATION OF THE SWIVEL RANGE
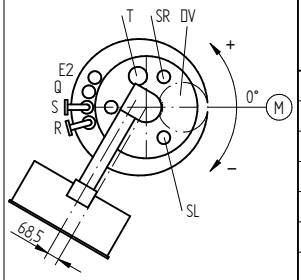	DRIVE SHAFT RIGHT HEAD VERSION 1	–180° 0° 180°
	PIPE CONNECTION R	–168° –140°
	PIPE CONNECTION S	–155° 177°
	PIPE CONNECTION Q	–171° 162°
	PIPE CONNECTION E2	147° 174°
	PRESSURE RELIEF DEVICE DV	–150° –35°
	TEMPERATURE SENSOR T	96° 175°
	INSPECTION WINDOW SL / SR	–64° SL –8° 56° SR 112°
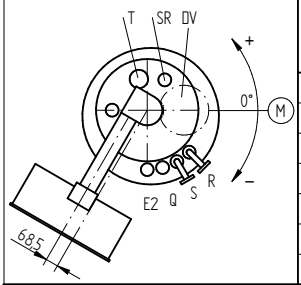	DRIVE SHAFT RIGHT HEAD VERSION 2	–180° 0° 180°
	PIPE CONNECTION R	–48° –21°
	PIPE CONNECTION S	–63° –36°
	PIPE CONNECTION Q	–78° –51°
	PIPE CONNECTION E2	–93° –66°
	PRESSURE RELIEF DEVICE DV	–150° –35°
	TEMPERATURE SENSOR T	96° 175°
	INSPECTION WINDOW SR	56° SR 112°
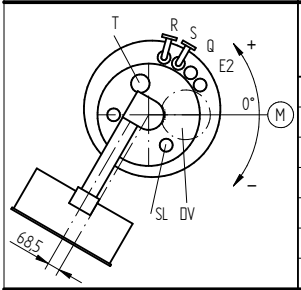	DRIVE SHAFT RIGHT HEAD VERSION 3	–180° 0° 180°
	PIPE CONNECTION R	72° 99°
	PIPE CONNECTION S	57° 84°
	PIPE CONNECTION Q	42° 69°
	PIPE CONNECTION E2	27° 54°
	PRESSURE RELIEF DEVICE DV	–150° –35°
	TEMPERATURE SENSOR T	96° 175°
	INSPECTION WINDOW SL	–64° SL –8°
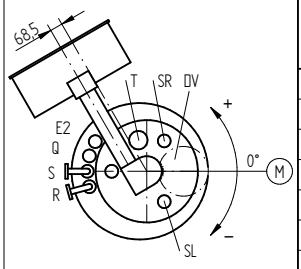	DRIVE SHAFT LEFT HEAD VERSION 1	–180° 0° 180°
	PIPE CONNECTION R	–162° 171°
	PIPE CONNECTION S	–177° 156°
	PIPE CONNECTION Q	141° 168°
	PIPE CONNECTION E2	126° 153°
	PRESSURE RELIEF DEVICE DV	35° 150°
	TEMPERATURE SENSOR T	34° 114°
	INSPECTION WINDOW SL / SR	–112° SL –56° 8° SR 64°
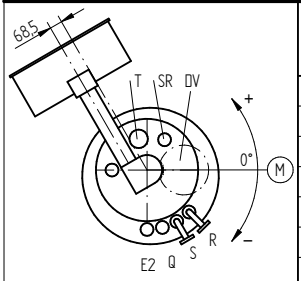	DRIVE SHAFT LEFT HEAD VERSION 2	–180° 0° 180°
	PIPE CONNECTION R	–69° –42°
	PIPE CONNECTION S	–84° –57°
	PIPE CONNECTION Q	–99° –72°
	PIPE CONNECTION E2	–114° –87°
	PRESSURE RELIEF DEVICE DV	35° 150°
	TEMPERATURE SENSOR T	34° 114°
	INSPECTION WINDOW SR	8° SR 64°
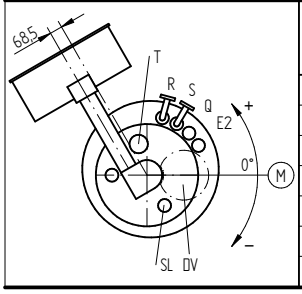	DRIVE SHAFT LEFT HEAD VERSION 3	–180° 0° 180°
	PIPE CONNECTION R	50° 78°
	PIPE CONNECTION S	35° 62°
	PIPE CONNECTION Q	21° 48°
	PIPE CONNECTION E2	6° 33°
	PRESSURE RELIEF DEVICE DV	35° 150°
	TEMPERATURE SENSOR T	34° 114°
	INSPECTION WINDOW SL	–112° SL –56°

LIMITATION OF THE SWIVEL RANGE THROUGH PIPE CONNECTIONS R AND S

LIMITATION OF THE SWIVEL RANGE THROUGH OPTIONAL EXISTING PIPE CONNECTIONS Q , E2 AND PRESSURE RELIEF DEVICE DV

SWIVEL RANGE POSSIBLE, BUT THE TEMPERATURE SENSOR T AND THE INSPECTION WINDOW SL / SR ARE NOT VISIBLE

	DATE	NAME	DOCUMENT NO.	
DFTR.	11.07.2018	BUTERUS	SED 1664686 001 04	
CHKD.	16.07.2018	WILHELM	CHANGE NO.	SCALE
STAND.	16.07.2018	PRODASTSCHUK	1086956	-

DIMENSION IN mm EXCEPT AS NOTED

ON-LOAD TAP-CHANGER
OILTAP® MS, M, RM, R AND VACUTAP® VR®, VM®, VMS®
SWIVEL RANGE OF THE GEAR UNIT

SERIAL NUMBER

MATERIAL NUMBER 7200276E

SHEET 1/1

A2

© MASCHINENFABRIK REINHAUSEN GMBH 2018
THE REPRODUCTION, DISTRIBUTION AND UTILIZATION OF THIS DOCUMENT AS WELL AS THE COMMUNICATION OF ITS CONTENTS TO OTHERS WITHOUT EXPRESS AUTHORIZATION IS PROHIBITED. OFFENDERS WILL BE HELD LIABLE FOR THE PAYMENT OF DAMAGES. ALL RIGHTS RESERVED IN THE EVENT OF THE GRANT OF A PATENT, UTILITY MODEL OR DESIGN.

G4

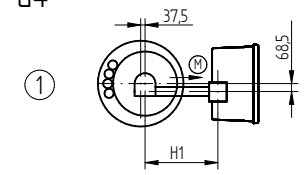

SWIVEL RANGE SEE 720027:

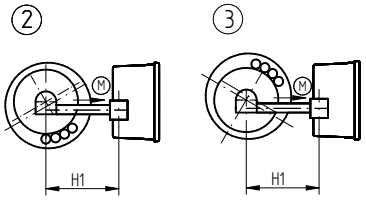

G12

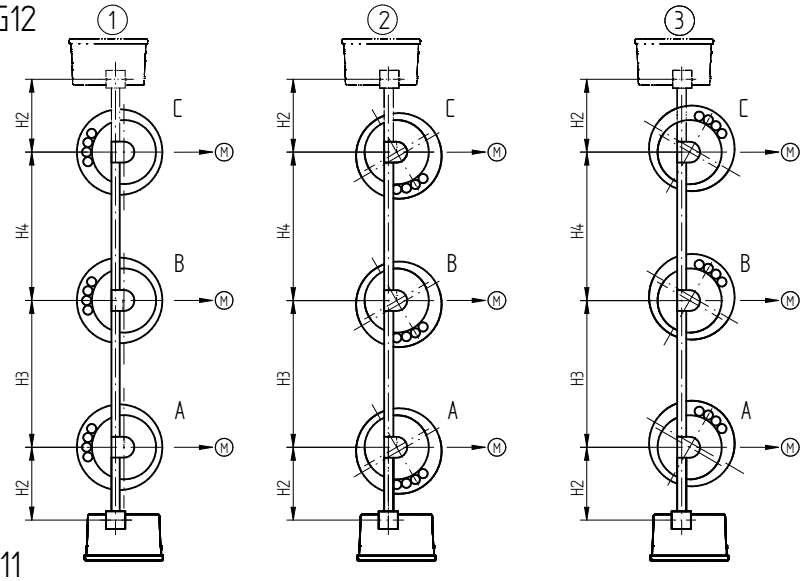

G11

G10

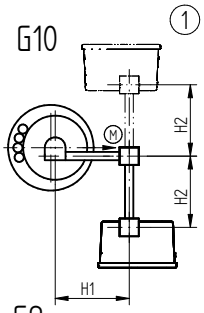

G9

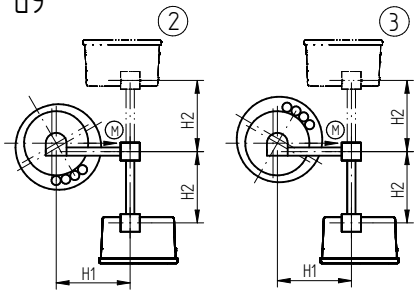

G14

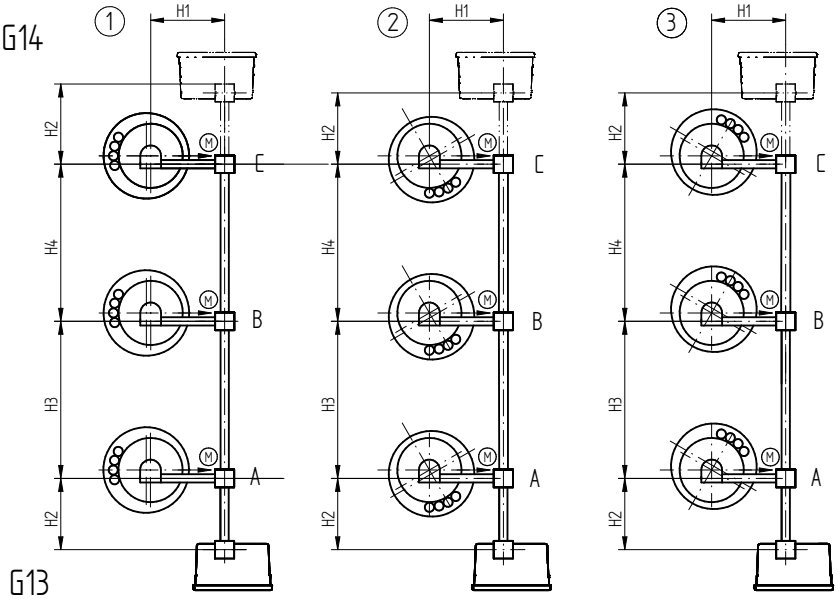

G13

ARRANGEMENT		G4	G9, G10	G11, G12	G13, G14
STANDARD DESIGN		■		■	
SPECIAL DESIGN			■		■
MINIMUM DIMENSIONS[1] (DETERMINED FOR MECHANICAL REASONS: NECESSARY INSULATION SPACINGS NOT CONSIDERED!)	H1	535	545	–	545
	H2	–	323	515	323
	H3 [2]	–	–	840	840
	H4 [2]	–	–	840	840
INTERMEDIATE BEARING FOR	H1 >	2254	2309	–	2309
	H2 >	–	2259	2254	2259
	H3 >	–	–	2249	2259
	H4 >	–	–	2249	2259

NOTE: 1) FOR OLTCS WITH THE CHANGE-OVER SELECTOR ATTACHED LATERALLY, THE DIMENSIONS OF THE CHANGE-OVER SELECTOR AFTER INSTALLED IN POSITION HAVE TO BE TAKEN INTO ACCOUNT (SEE THE CORRESPONDING OLTC-DIMENSION DRAWING)
2) IN GENERAL DETERMINED BY THE INSULATION SPACING BETWEEN POLES A, B, C.

① ② ③ – HEAD VERSION
→ Ⓜ – DRIVE SIDE OF SELECTOR

	DATE	NAME	DOCUMENT NO.	
DFTR.	13.07.2018	BUTERUS	SED 1706827 001 05	
CHKD.	16.07.2018	WILHELM	CHANGE NO.	SCALE
STAND.	16.07.2018	PRODASTSCHUK	1086956	-

DIMENSION IN mm EXCEPT AS NOTED

OLTC OILTAP® M, MS, RM, R / VACUTAP® VR®, VM®, VMS®
HORIZONTAL DRIVE SHAFT, CENTRIC DRIVE (LIMIT DIMENSIONS)
SELECTOR SIZE B/C/D/RC/RD/RDE

SERIAL NUMBER

MATERIAL NUMBER 893896DE

SHEET 1/1

A2

PIPE CONNECTION WITH TAP-CHANGE SUPERVISORY CONTROL BUSHING WITHOUT OIL FILTER UNIT

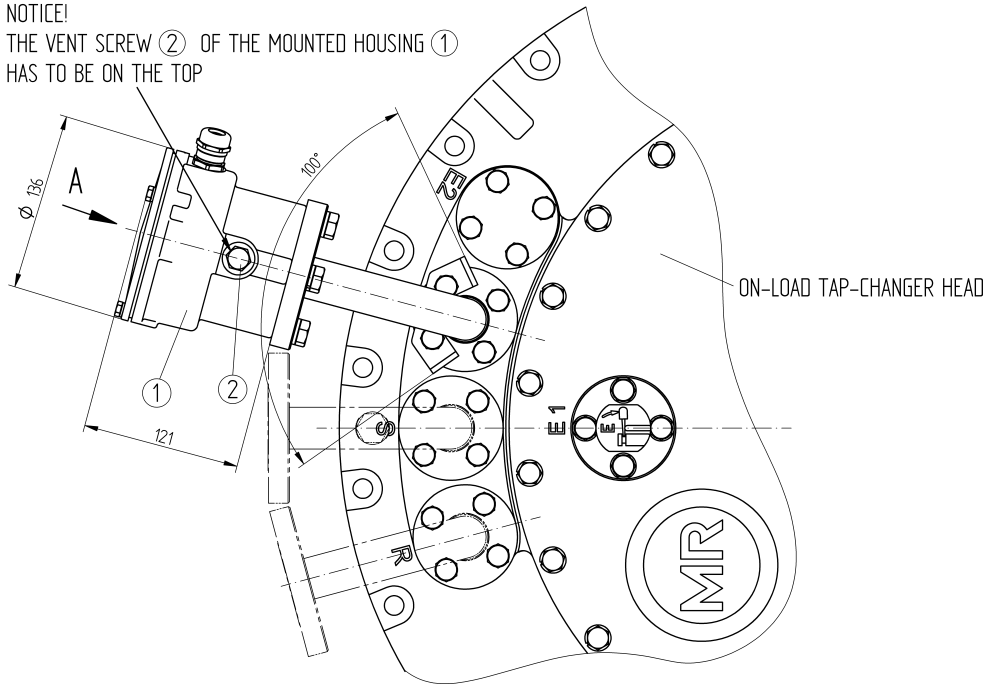

A 1:1
REPRESENTED WITHOUT COVER

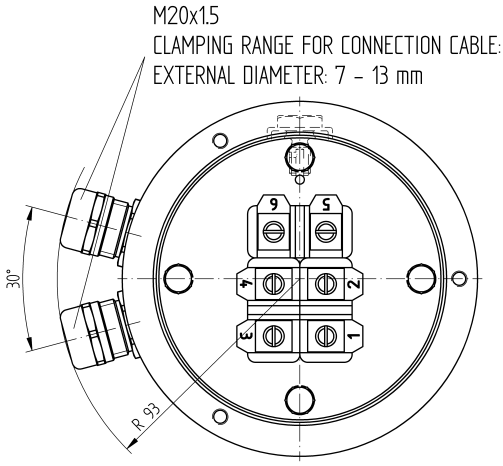

CONNECTION TERMINALS FOR TAP-CHANGE SUPERVISORY CONTROL

WIRING SEE CONNECTION DIAGRAM OF THE MOTOR-DRIVE UNIT

FUNCTION DIAGRAM FOR TAP-CHANGE SUPERVISORY CONTROL SEE MOTOR-DRIVE CONNECTION DIAGRAM

RATED CONTINOUS CURRENT: 2A
RATED VOLTAGE DC/AC (50HZ): 24V ... 250V
DIELECTRIC STRENGTH: 1150V / 50HZ / 1 MIN.

DIELECTRIC TEST OF ALL VOLTAGE CARRYING TERMINALS TO GROUND:
2000V AC , 50HZ , TEST-DURATION 1 MIN.

© MASCHINENFABRIK REINHAUSEN GMBH 2016
THE REPRODUCTION, DISTRIBUTION AND UTILIZATION OF THIS DOCUMENT AS WELL AS THE COMMUNICATION OF ITS CONTENTS TO OTHERS WITHOUT EXPRESS AUTHORIZATION IS PROHIBITED. OFFENDERS WILL BE HELD LIABLE FOR THE PAYMENT OF DAMAGES. ALL RIGHTS RESERVED IN THE EVENT OF THE GRANT OF A PATENT, UTILITY MODEL OR DESIGN.

	DATE	NAME	DOCUMENT NO.	
DFTR.	03.11.2016	RAEDLINGER	SED 2425358 001 02	
CHKD.	04.11.2016	NERRETER	CHANGE NO.	SCALE
STAND.	04.11.2016	PRODASTSCHUK	1078202	1:2

DIMENSION IN mm EXCEPT AS NOTED

ON-LOAD TAP-CHANGER VACUTAP® VM, VR
PIPE CONNECTION WITH TAP-CHANGE SUPERVISORY CONTROL

SERIAL NUMBER

MATERIAL NUMBER 7661612E

SHEET 1/1

4.5 選択器

© MASCHINENFABRIK REINHAUSEN GMBH 2015
THE REPRODUCTION, DISTRIBUTION AND UTILIZATION OF THIS DOCUMENT AS WELL AS THE COMMUNICATION OF ITS CONTENTS TO OTHERS WITHOUT EXPRESS AUTHORIZATION IS PROHIBITED. OFFENDERS WILL BE HELD LIABLE FOR THE PAYMENT OF DAMAGES. ALL RIGHTS RESERVED IN THE EVENT OF THE GRANT OF A PATENT, UTILITY MODEL OR DESIGN.

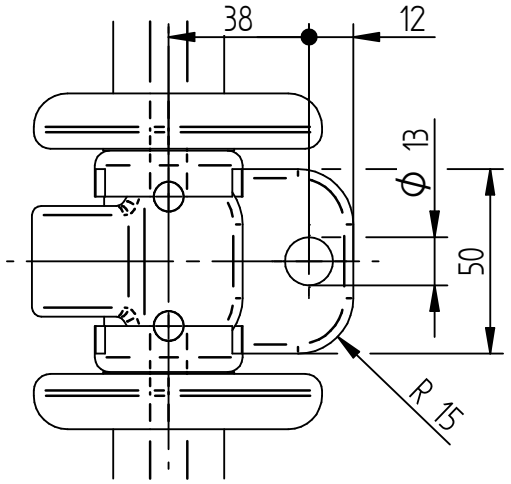

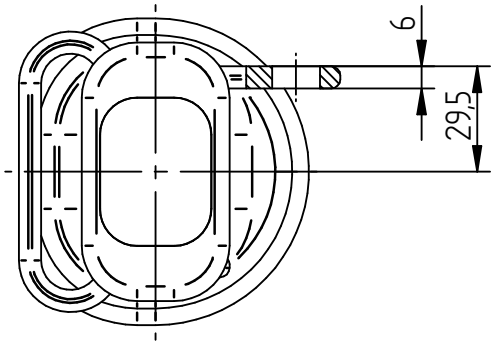

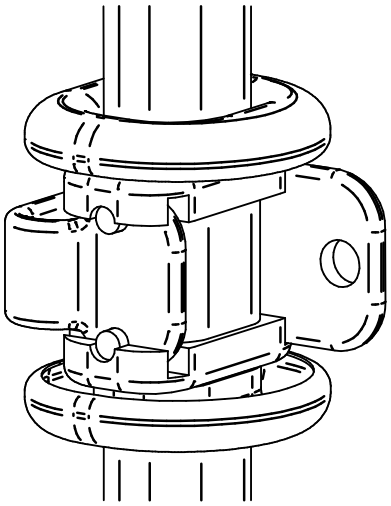

	DATE	NAME	DOCUMENT NO.	
DFTR.	06.10.2016	LIPINSKI	SED 4322131 001 01	
CHKD.	19.10.2016	HILTNER	CHANGE NO.	SCALE
STAND.	20.10.2016	PRODASTSCHUK	1077666	1:2

DIMENSION IN mm EXCEPT AS NOTED

SELECTOR SIZE RC/RD/RDE/RE/RF
SELECTOR CONNECTION CONTACT
DIMENSION DRAWING

SERIAL NUMBER

MATERIAL NUMBER 100099170E

SHEET 1/1

A4

CONTACT ARRANGEMENT – WITHOUT CHANGE-OVER SELECTOR

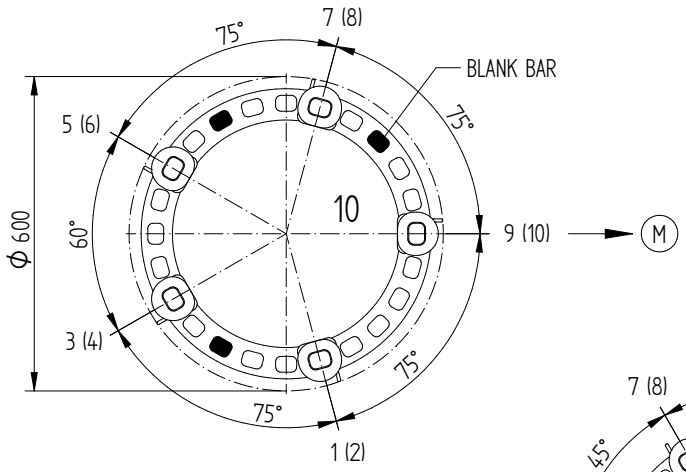

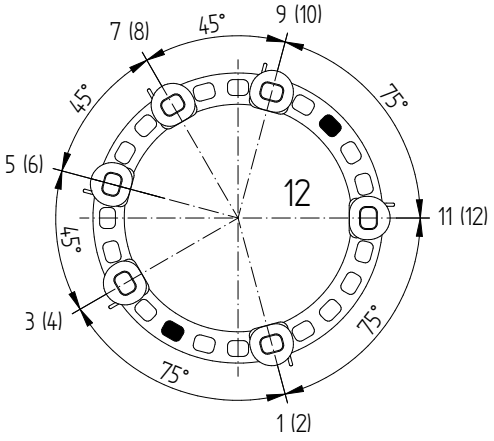

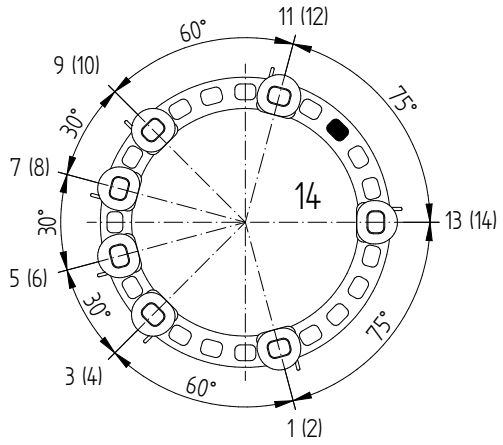

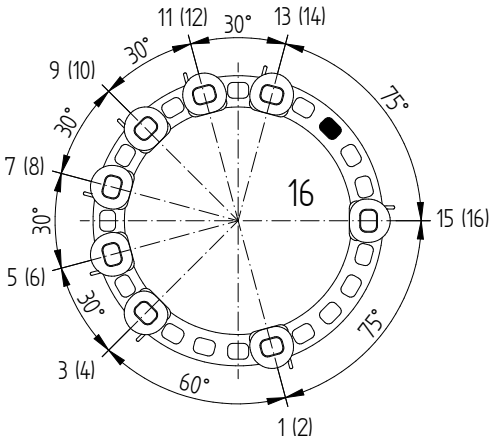

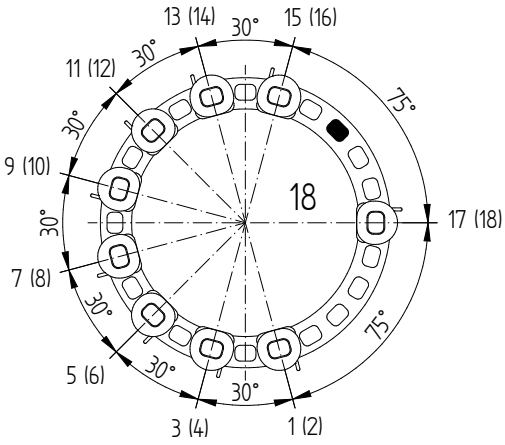

Ⓜ DRIVE SIDE OF SELECTOR

DESIGNATION OF SELECTOR CONNECTION CONTACT
E.G.: 3 = UPPER SELECTOR PLANE
(4) = LOWER SELECTOR PLANE

THE DETAILED CONNECTION DIAGRAM IS BINDING FOR THE DESIGNATION OF THE CONNECTION CONTACTS AND PHASES

© MASCHINENFABRIK REINHAUSEN GMBH 2015
THE REPRODUCTION, DISTRIBUTION AND UTILIZATION OF THIS DOCUMENT AS WELL AS THE COMMUNICATION OF ITS CONTENTS TO OTHERS WITHOUT EXPRESS AUTHORIZATION IS PROHIBITED. OFFENDERS WILL BE HELD LIABLE FOR THE PAYMENT OF DAMAGES. ALL RIGHTS RESERVED IN THE EVENT OF THE GRANT OF A PATENT, UTILITY MODEL OR DESIGN.

	DATE	NAME	DOCUMENT NO.	
DFTR.	18.10.2016	CTETPRAKTIK2	SED 4245760 001 01	
CHKD.	19.10.2016	HILTNER	CHANGE NO.	SCALE
STAND.	20.10.2016	PRODASTSCHUK	1077666	1:5

DIMENSION IN mm EXCEPT AS NOTED

MR

SELECTOR SIZE RC/RD/RDE
CONTACT ARRANGEMENT
DIMENSION DRAWING

SERIAL NUMBER

MATERIAL NUMBER 100090300E

SHEET 1/3

A1

CONTACT ARRANGEMENT – REVERSING CHANGE-OVER SELECTOR

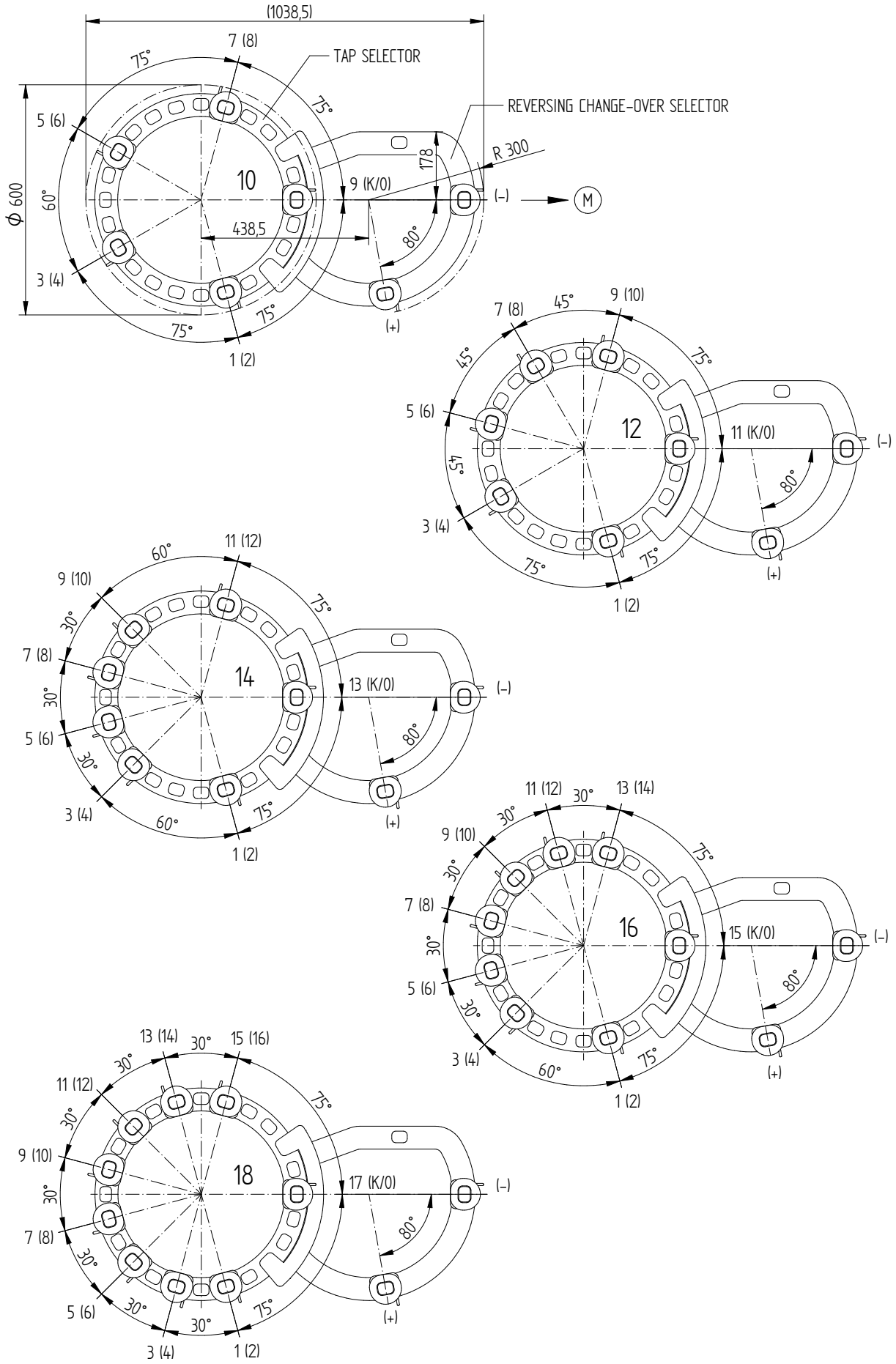

© MASCHINENFABRIK REINHAUSEN GMBH 2015
THE REPRODUCTION, DISTRIBUTION AND UTILIZATION OF THIS DOCUMENT AS WELL AS THE COMMUNICATION OF ITS CONTENTS TO OTHERS WITHOUT EXPRESS AUTHORIZATION IS PROHIBITED. OFFENDERS WILL BE HELD LIABLE FOR THE PAYMENT OF DAMAGES. ALL RIGHTS RESERVED IN THE EVENT OF THE GRANT OF A PATENT, UTILITY MODEL OR DESIGN.

	DATE	NAME	DOCUMENT NO.	
DFTR.	18.10.2016	CTETPRAKTIK2	SED 4245760 001 01	
CHKD.	19.10.2016	HILTNER	CHANGE NO.	SCALE
STAND.	20.10.2016	PRODASTSCHUK	1077666	1:5

DIMENSION IN mm EXCEPT AS NOTED

MR

SELECTOR SIZE RC/RD/RDE
CONTACT ARRANGEMENT
DIMENSION DRAWING

SERIAL NUMBER

MATERIAL NUMBER 100090300E

SHEET 2/3

A1

CONTACT ARRANGEMENT – COARSE CHANGE-OVER SELECTOR

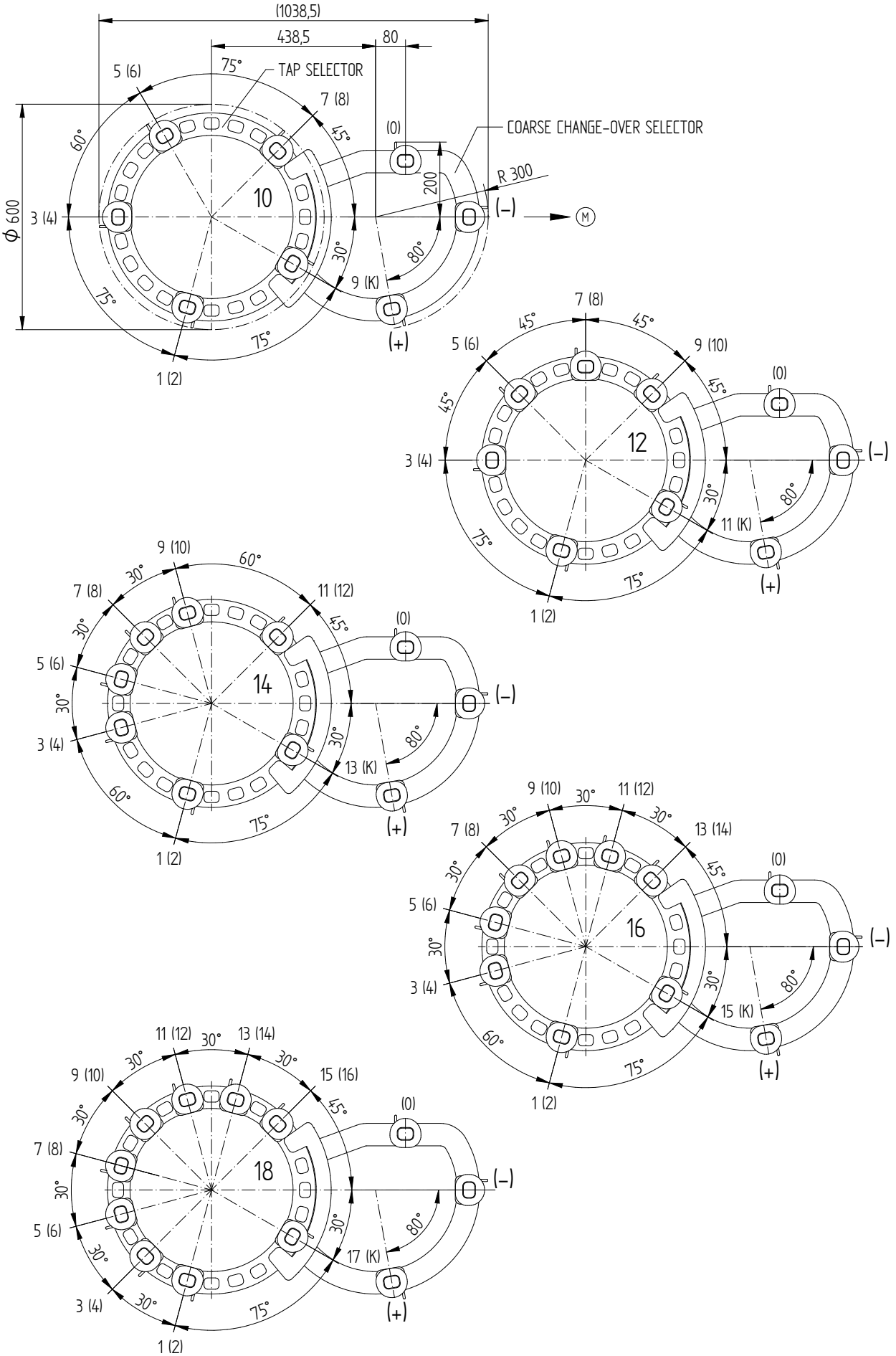

© MASCHINENFABRIK REINHAUSEN GMBH 2015
THE REPRODUCTION, DISTRIBUTION AND UTILIZATION OF THIS DOCUMENT AS WELL AS THE COMMUNICATION OF ITS CONTENTS TO OTHERS WITHOUT EXPRESS AUTHORIZATION IS PROHIBITED. OFFENDERS WILL BE HELD LIABLE FOR THE PAYMENT OF DAMAGES. ALL RIGHTS RESERVED IN THE EVENT OF THE GRANT OF A PATENT, UTILITY MODEL OR DESIGN.

	DATE	NAME	DOCUMENT NO.	
DFTR.	18.10.2016	CTETPRAKTIK2	SED 4245760 001 01	
CHKD.	19.10.2016	HILTNER	CHANGE NO.	SCALE
STAND.	20.10.2016	PRODASTSCHUK	1077666	1:5

DIMENSION IN mm EXCEPT AS NOTED

MR

SELECTOR SIZE RC/RD/RDE
CONTACT ARRANGEMENT
DIMENSION DRAWING

SERIAL NUMBER

MATERIAL NUMBER 100090300E

SHEET 3/3

A1

CONTACT ARRANGEMENT – WITHOUT CHANGE-OVER SELECTOR

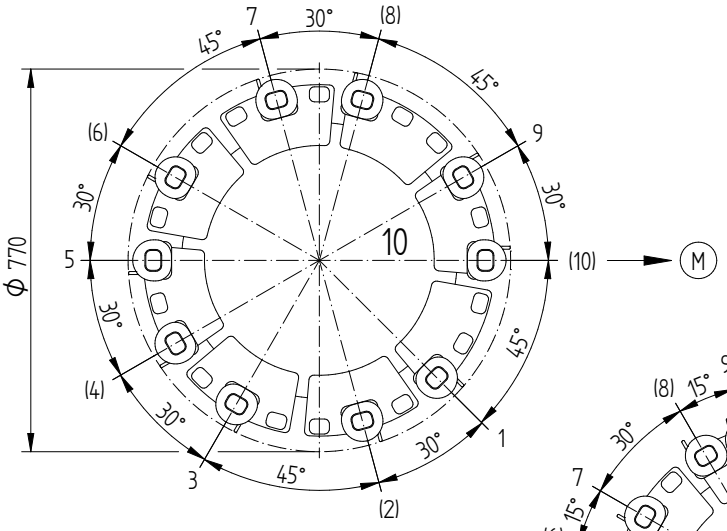

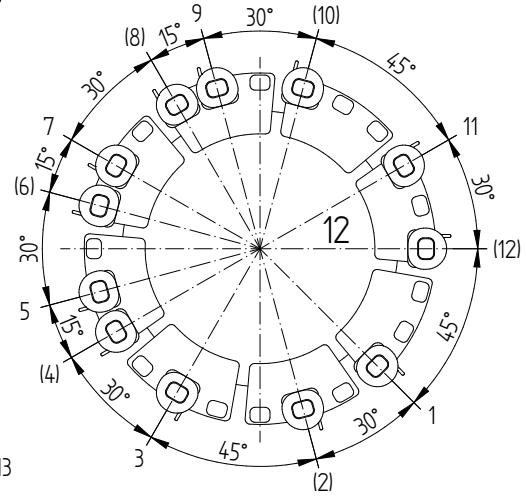

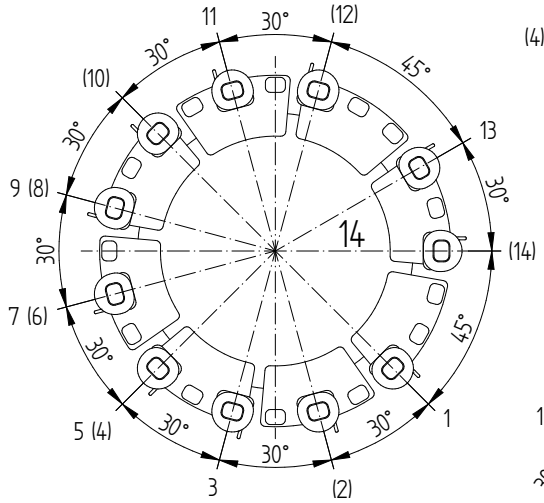

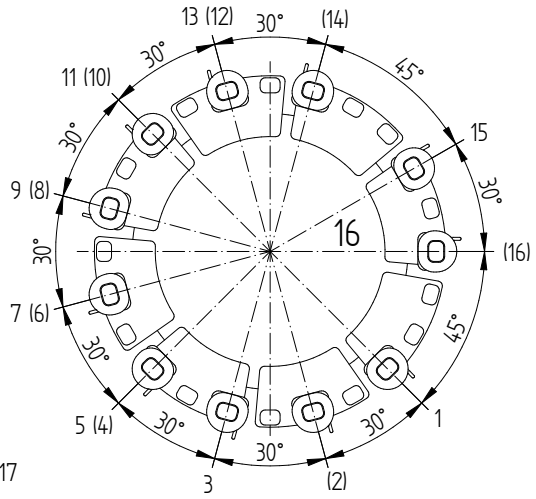

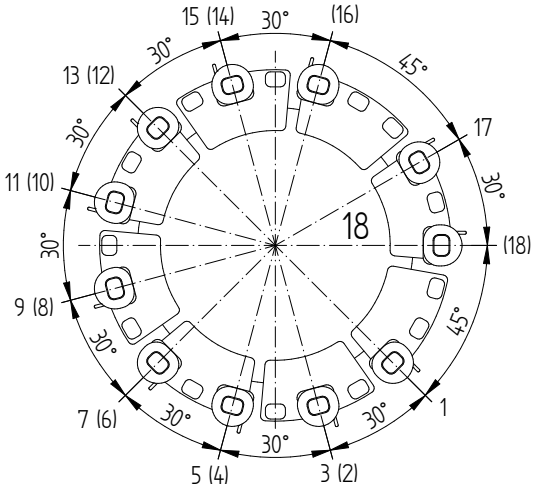

(M) DRIVE SIDE OF SELECTOR

DESIGNATION OF SELECTOR CONNECTION CONTACT
E.G.: 3 = UPPER SELECTOR PLANE
(4) = LOWER SELECTOR PLANE

THE DETAILED CONNECTION DIAGRAM IS BINDING FOR THE DESIGNATION OF THE CONNECTION CONTACTS AND PHASES

© MASCHINENFABRIK REINHAUSEN GMBH 2015
THE REPRODUCTION, DISTRIBUTION AND UTILIZATION OF THIS DOCUMENT AS WELL AS THE COMMUNICATION OF ITS CONTENTS TO OTHERS WITHOUT EXPRESS AUTHORIZATION IS PROHIBITED. OFFENDERS WILL BE HELD LIABLE FOR THE PAYMENT OF DAMAGES. ALL RIGHTS RESERVED IN THE EVENT OF THE GRANT OF A PATENT, UTILITY MODEL OR DESIGN.

	DATE	NAME	DOCUMENT NO.	
DFTR.	18.10.2016	CTETPRAKTIK2	SED 5026318 001 01	
CHKD.	19.10.2016	HILTNER	CHANGE NO.	SCALE
STAND.	20.10.2016	PRODASTSCHUK	1077666	1:5

DIMENSION IN mm EXCEPT AS NOTED

MR

SELECTOR SIZE RE/RF
CONTACT ARRANGEMENT
DIMENSION DRAWING

SERIAL NUMBER

MATERIAL NUMBER 100165700E

SHEET 1/3

A1

CONTACT ARRANGEMENT – REVERSING CHANGE-OVER SELECTOR

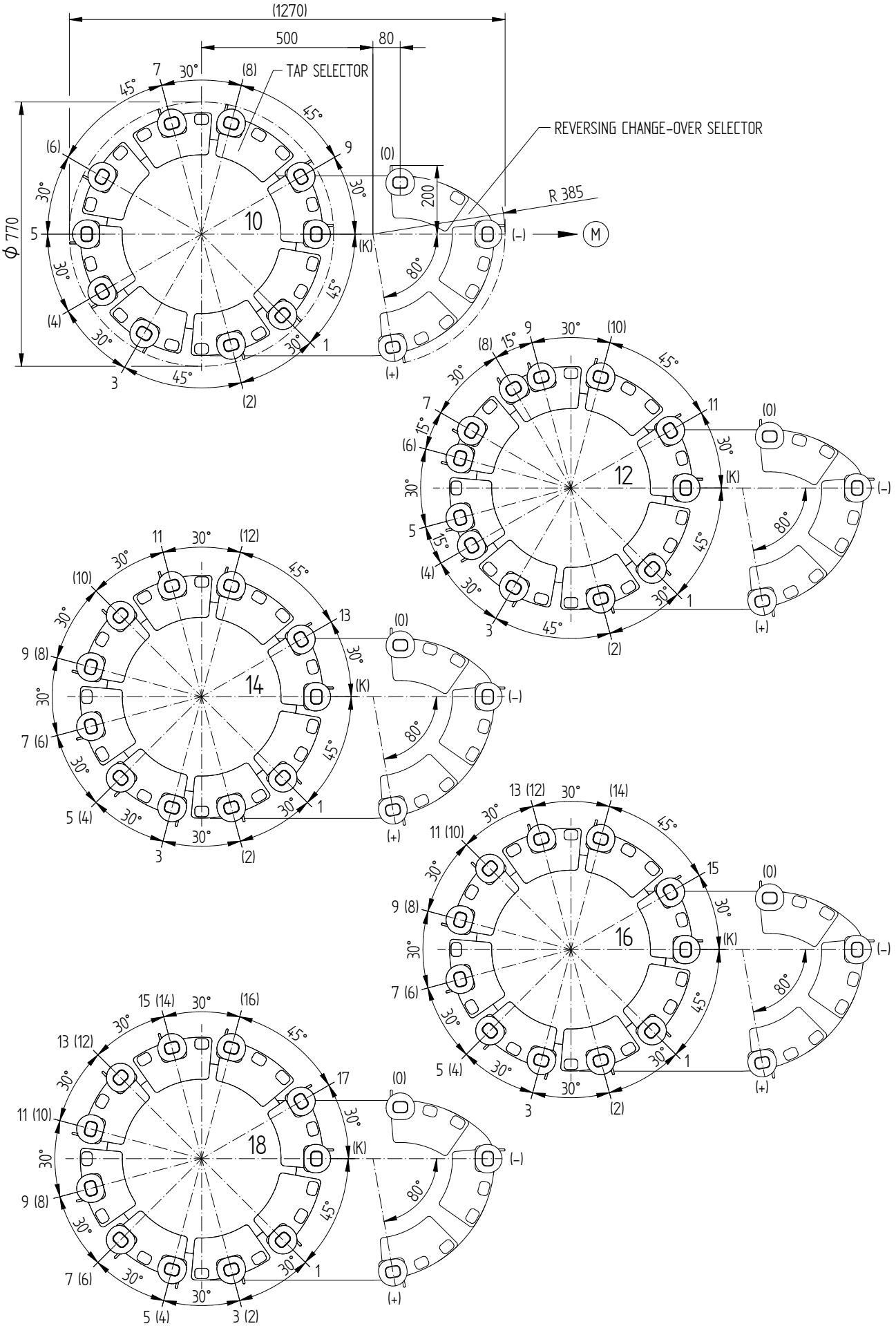

© MASCHINENFABRIK REINHAUSEN GMBH 2015
THE REPRODUCTION, DISTRIBUTION AND UTILIZATION OF THIS DOCUMENT AS WELL AS THE COMMUNICATION OF ITS CONTENTS TO OTHERS WITHOUT EXPRESS AUTHORIZATION IS PROHIBITED. OFFENDERS WILL BE HELD LIABLE FOR THE PAYMENT OF DAMAGES. ALL RIGHTS RESERVED IN THE EVENT OF THE GRANT OF A PATENT, UTILITY MODEL OR DESIGN.

	DATE	NAME	DOCUMENT NO.	
DFTR.	18.10.2016	CTETPRAKTIK2	SED 5026318 001 01	
CHKD.	19.10.2016	HILTNER	CHANGE NO.	SCALE
STAND.	20.10.2016	PRODASTSCHUK	1077666	1:5

DIMENSION IN mm EXCEPT AS NOTED

MR

SELECTOR SIZE RE/RF
CONTACT ARRANGEMENT
DIMENSION DRAWING

SERIAL NUMBER

MATERIAL NUMBER 100165700E

SHEET 2/3

A1

CONTACT ARRANGEMENT – COARSE CHANGE-OVER SELECTOR

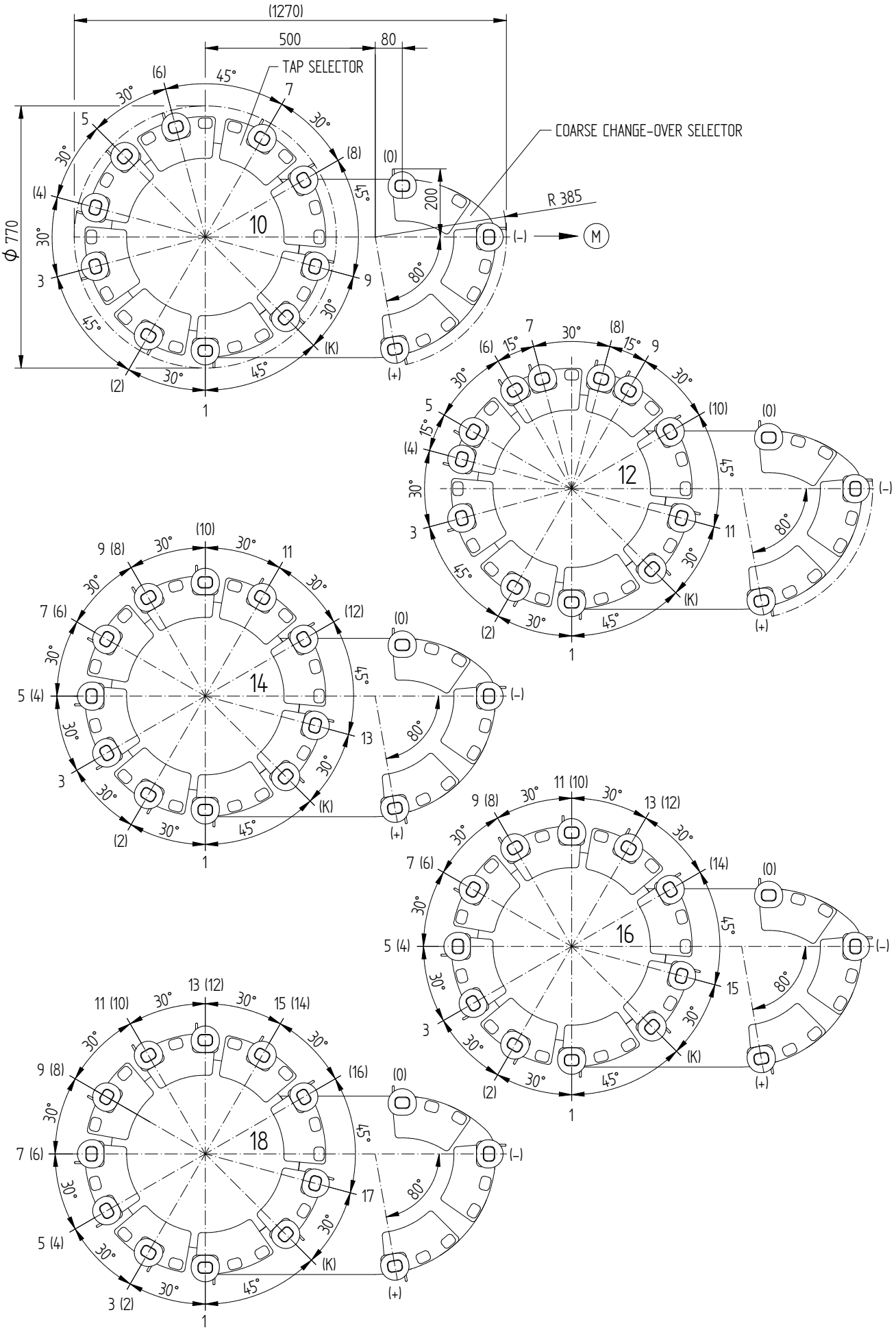

© MASCHINENFABRIK REINHAUSEN GMBH 2015
THE REPRODUCTION, DISTRIBUTION AND UTILIZATION OF THIS DOCUMENT AS WELL AS THE COMMUNICATION OF ITS CONTENTS TO OTHERS WITHOUT EXPRESS AUTHORIZATION IS PROHIBITED. OFFENDERS WILL BE HELD LIABLE FOR THE PAYMENT OF DAMAGES. ALL RIGHTS RESERVED IN THE EVENT OF THE GRANT OF A PATENT, UTILITY MODEL OR DESIGN.

	DATE	NAME	DOCUMENT NO.	
DFTR.	18.10.2016	CTETPRAKTIK2	SED 5026318 001 01	
CHKD.	19.10.2016	HILTNER	CHANGE NO.	SCALE
STAND.	20.10.2016	PRODASTSCHUK	1077666	1:5

DIMENSION IN mm EXCEPT AS NOTED

MR

SELECTOR SIZE RE/RF
CONTACT ARRANGEMENT
DIMENSION DRAWING

SERIAL NUMBER

MATERIAL NUMBER 100165700E

SHEET 3/3

A1

© MASCHINENFABRIK REINHAUSEN GMBH 2015
THE REPRODUCTION, DISTRIBUTION AND UTILIZATION OF THIS DOCUMENT AS WELL AS THE COMMUNICATION OF ITS CONTENTS TO OTHERS WITHOUT EXPRESS AUTHORIZATION IS PROHIBITED. OFFENDERS WILL BE HELD LIABLE FOR THE PAYMENT OF DAMAGES. ALL RIGHTS RESERVED IN THE EVENT OF THE GRANT OF A PATENT, UTILITY MODEL OR DESIGN.

SELECTOR WITHOUT CHANGE-OVER SELECTOR:

SELECTOR WITH REVERSING CHANGE-OVER SELECTOR:

REPRESENTATION APPLIES TO 3-PHASES Y-DESIGN AND 2-PHASES IN 1-PHASE SELECTORS THE UPPER AND LOWER SELECTOR PLANE ARE INTERCHANGED

SELECTOR WITH COARSE CHANGE-OVER SELECTOR:

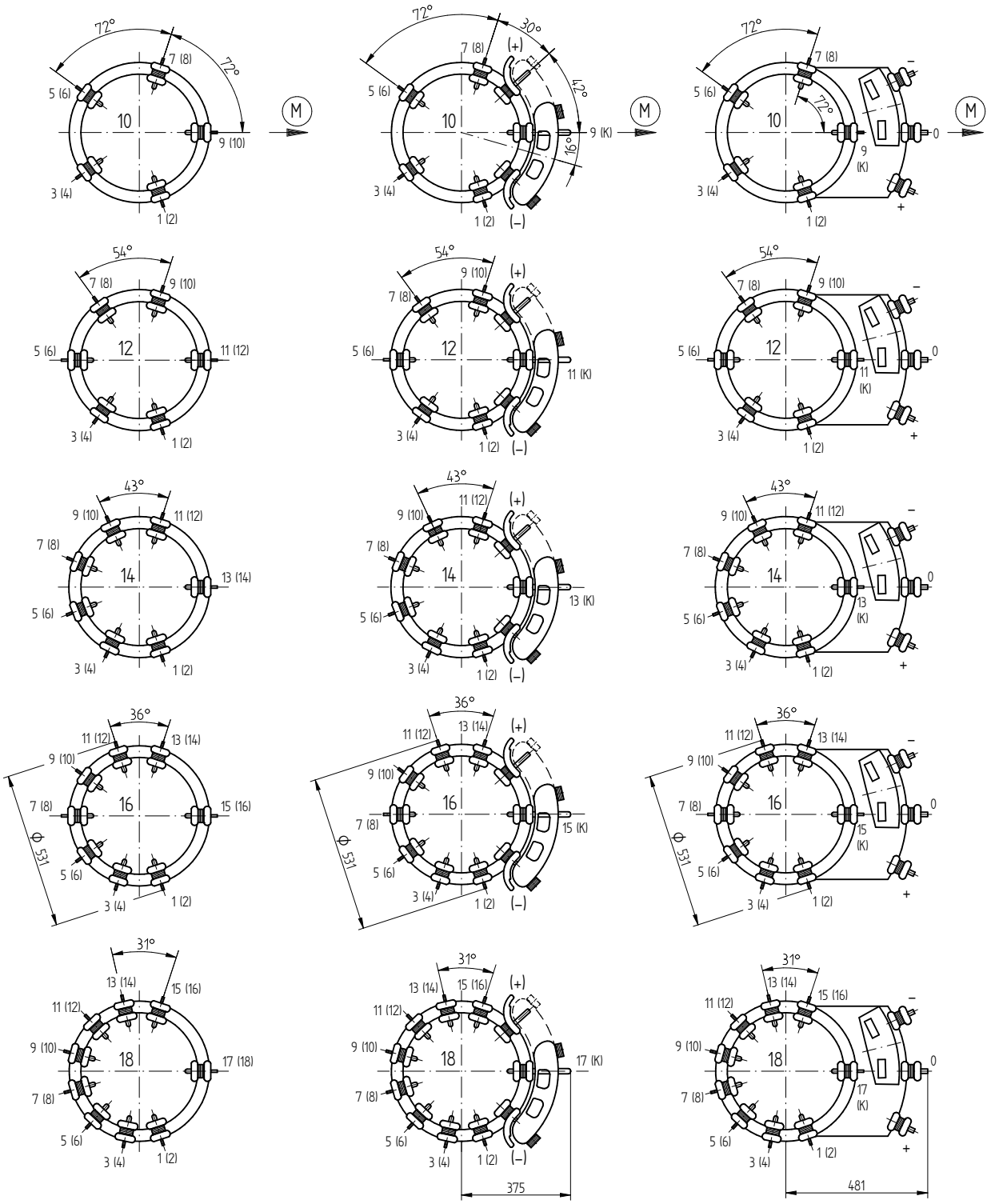

(M) – DRIVE SIDE OF SELECTOR

THE DETAILED CONNECTION DIAGRAM IS BINDING FOR THE DESIGNATION OF THE SELECTOR CONNECTION CONTACTS

DESIGNATION OF SELECTOR CONNECTION CONTACTS
E.G.: 3 UPPER CONTACT PLANE
(4) LOWER CONTACT PLANE

	DATE	NAME	DOCUMENT NO.	
DFTR.	18.10.2016	CTETPRAKTIK2	SED 516932 001 00	
CHKD.	19.10.2016	HILTNER	CHANGE NO.	SCALE
STAND.	19.10.2016	PRODASTSCHUK	1077668	1:10

DIMENSION IN mm EXCEPT AS NOTED

ON-LOAD TAP-CHANGER VACUTAP® VR
VR S/M – ARRANGEMENT OF CONTACTS – SELECTOR SIZE B/C/D/DE DIMENSION DRAWING

SERIAL NUMBER –

MATERIAL NUMBER 100180460E

SHEET 1/1

A2

MASCHINENFABRIK REINHAUSEN GMBH COPYRIGHT RESERVED
THE REPRODUCTION, DISTRIBUTION AND UTILIZATION OF THIS DOCUMENT AS WELL AS THE COMMUNICATION OF ITS CONTENTS TO OTHERS WITHOUT EXPRESS AUTHORIZATION IS PROHIBITED. OFFENDERS WILL BE HELD LIABLE FOR THE PAYMENT OF DAMAGES. ALL RIGHTS RESERVED IN THE EVENT OF THE GRANT OF A PATENT, UTILITY MODEL OR DESIGN.

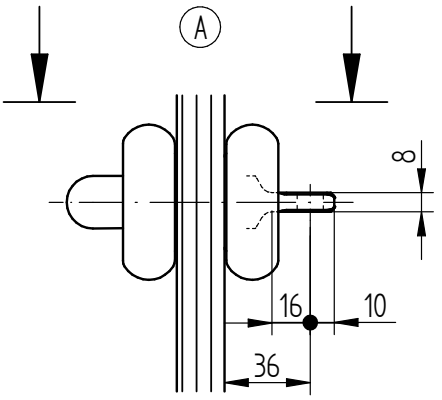

THROUGH-HOLE VERTICAL

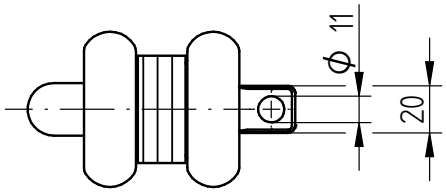

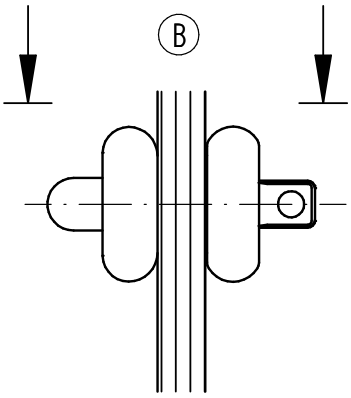

THROUGH-HOLE HORIZONTAL

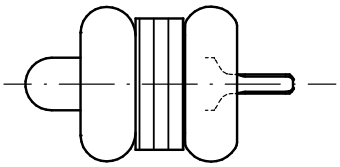

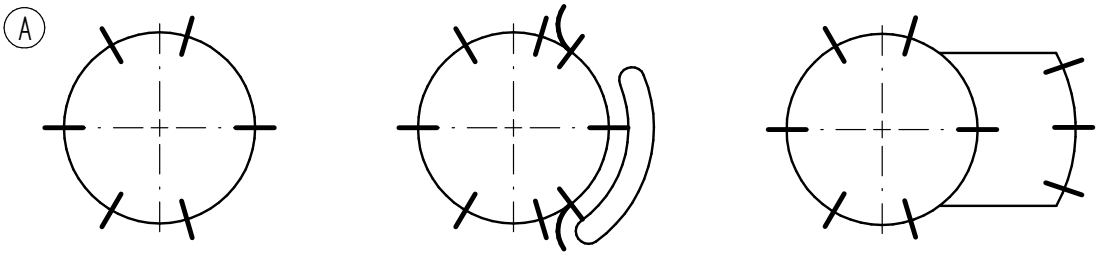

VRS/ VRM III 700 – 0
VRS/ VRM I 701 – 0
VRS/ VRM II 702 – 0

VRS/ VRM III 700 – W
VRS/ VRM I 701 – W
VRS/ VRM II 702 – W

VRS/ VRM III 700 – G
VRS/ VRM I 701 – G
VRS/ VRM II 702 – G

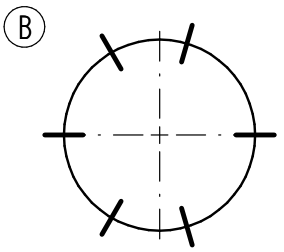

VRS/ VRM I 1001 – 0
VRS/ VRM I 1301 – 0

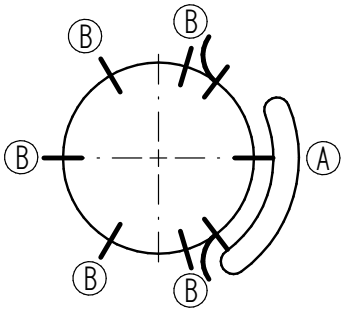

VRS/ VRM I 1001 – W
VRS/ VRM I 1301 – W

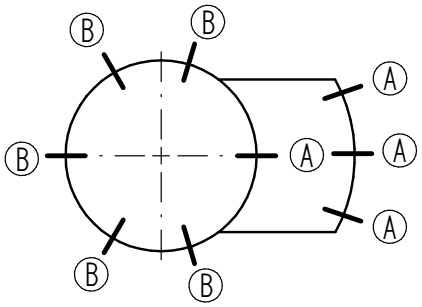

VRS/ VRM I 1001 – G
VRS/ VRM I 1301 – G

(A) + (B)

	DATE	NAME	DOCUMENT NO.	
DFTR.	08.02.2021	MENZELS	SED 7921643 000 00	
EHKD.	08.02.2021	MOSER	CHANGE NO.	SCALE
STAND	08.02.2021	KLEYN	1106396	12

DIMENSION IN mm EXCEPT AS NOTED

DE-ENERGIZED TAP-CHANGER VACUTAP® VR®
VRS/ VRM – B/ C/ D/ DE
INSTALLATION POSITION OF THE TAP SELECTOR CONTACT TERMINALS

SERIAL NUMBER
–

MATERIAL NUMBER 101357420E

SHEET 1/ 1

A3

© MASCHINENFABRIK REINHAUSEN GMBH 2015
THE REPRODUCTION, DISTRIBUTION AND UTILIZATION OF THIS DOCUMENT AS WELL AS THE COMMUNICATION OF ITS CONTENTS TO OTHERS WITHOUT EXPRESS AUTHORIZATION IS PROHIBITED. OFFENDERS WILL BE HELD LIABLE FOR THE PAYMENT OF DAMAGES. ALL RIGHTS RESERVED IN THE EVENT OF THE GRANT OF A PATENT, UTILITY MODEL OR DESIGN.

REVERSING CHANGE-OVER SELECTOR

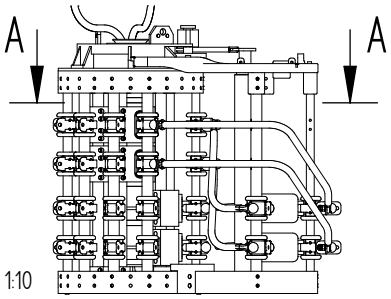

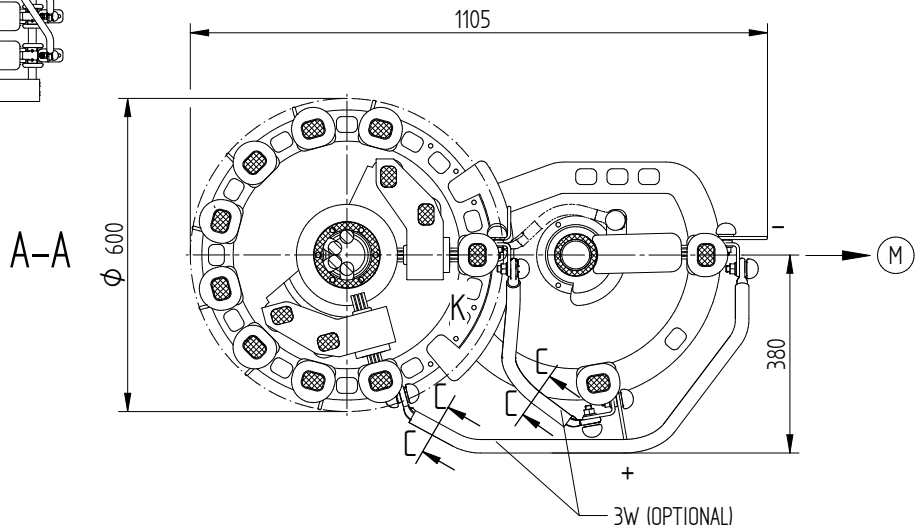

COARSE CHANGE-OVER SELECTOR

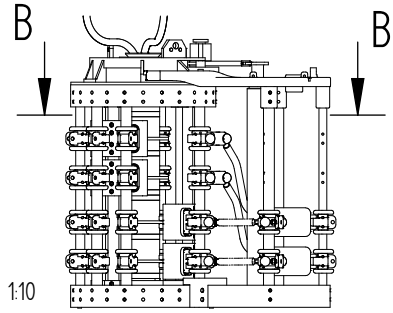

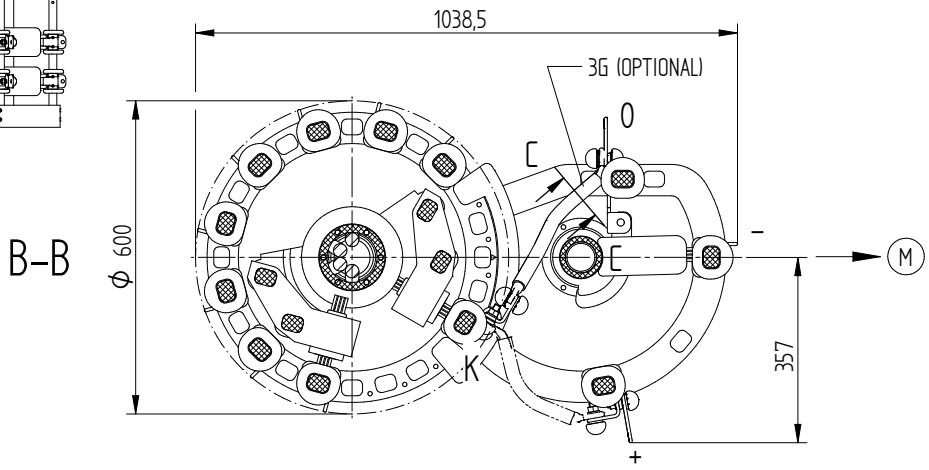

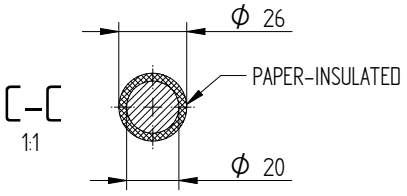

(M) DRIVE SIDE OF SELECTOR

THE DETAILED CONNECTION DIAGRAM IS BINDING FOR THE DESIGNATION OF THE CONNECTION CONTACTS AND PHASES

	DATE	NAME	DOCUMENT NO.	
DFTR.	18.10.2016	CTETPRAKTIK2	SEO 4335433 001 02	
CHKD.	19.10.2016	HILTNER	CHANGE NO.	SCALE
STAND.	20.10.2016	PRODASTSCHUK	1077666	1:5

DIMENSION IN mm EXCEPT AS NOTED

SELECTOR SIZE RC/RD/RDE CONNECTING LEAD 3W/3G DIMENSION DRAWING

SERIAL NUMBER –

MATERIAL NUMBER 100100190E

SHEET 1/1

A1

© MASCHINENFABRIK REINHAUSEN GMBH 2016
THE REPRODUCTION, DISTRIBUTION AND UTILIZATION OF THIS DOCUMENT AS WELL AS THE COMMUNICATION OF ITS CONTENTS TO OTHERS WITHOUT EXPRESS AUTHORIZATION IS PROHIBITED. OFFENDERS WILL BE HELD LIABLE FOR THE PAYMENT OF DAMAGES. ALL RIGHTS RESERVED IN THE EVENT OF THE GRANT OF A PATENT, UTILITY MODEL OR DESIGN.

REVERSING CHANGE-OVER SELECTOR

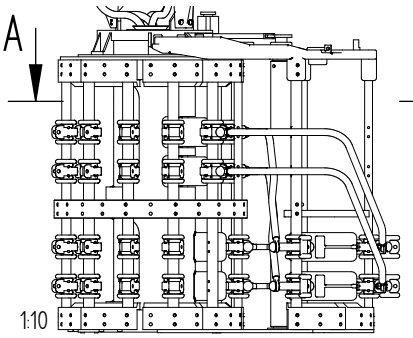

A–A

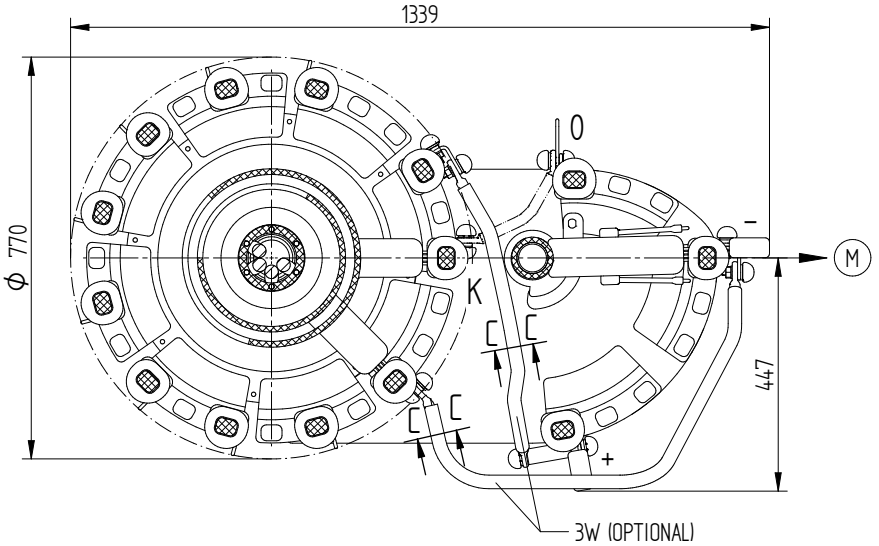

COARSE CHANGE-OVER SELECTOR

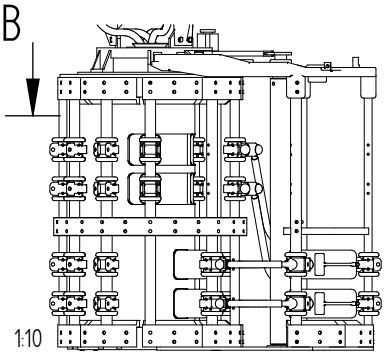

B–B

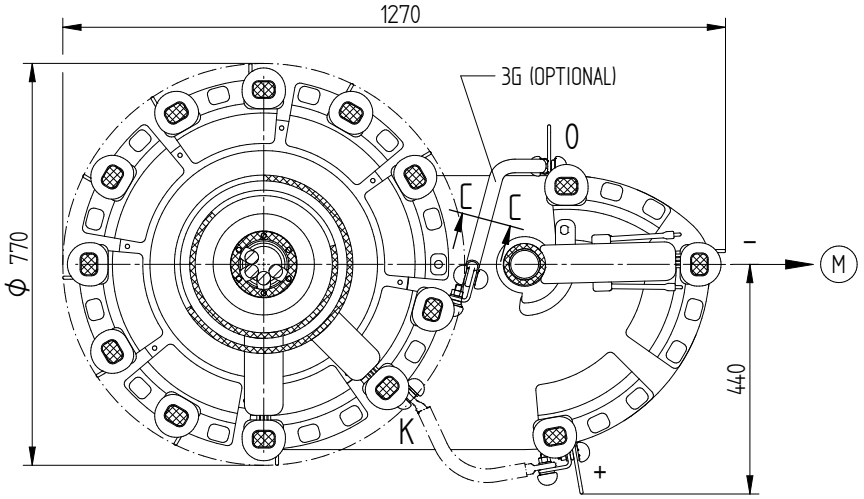

C–C
1:1

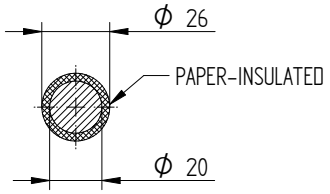

(M) DRIVE SIDE OF SELECTOR

THE DETAILED CONNECTION DIAGRAM IS BINDING FOR THE DESIGNATION OF THE CONNECTION CONTACTS AND PHASES

	DATE	NAME	DOCUMENT NO.	
DFTR.	19.10.2016	CTETPRAKTIK2	SED 5089626 001 02	
CHKD.	20.10.2016	HILTNER	CHANGE NO.	SCALE
STAND.	20.10.2016	PRODASTSCHUK	1077337	1:5

DIMENSION IN mm EXCEPT AS NOTED

MR

SELECTOR SIZE RE/RF
CONNECTING LEAD 3W/3G
DIMENSION DRAWING

SERIAL NUMBER
–

MATERIAL NUMBER
100172640E

SHEET
1/1

A1

© MASCHINENFABRIK REINHAUSEN GMBH 2018
THE REPRODUCTION, DISTRIBUTION AND UTILIZATION OF THIS DOCUMENT AS WELL AS THE COMMUNICATION OF ITS CONTENTS TO OTHERS WITHOUT EXPRESS AUTHORIZATION IS PROHIBITED. OFFENDERS WILL BE HELD LIABLE FOR THE PAYMENT OF DAMAGES. ALL RIGHTS RESERVED IN THE EVENT OF THE GRANT OF A PATENT, UTILITY MODEL OR DESIGN.

REVERSING CHANGE-OVER SELECTOR

E – F (TYPE M / VM / VMS-C) AND D – D (TYPE VRC / VRE / VRC I HD / VRE I HD / VRS / VRM)

REPRESENTATION APPLIES TO 12-PITCH SELECTOR

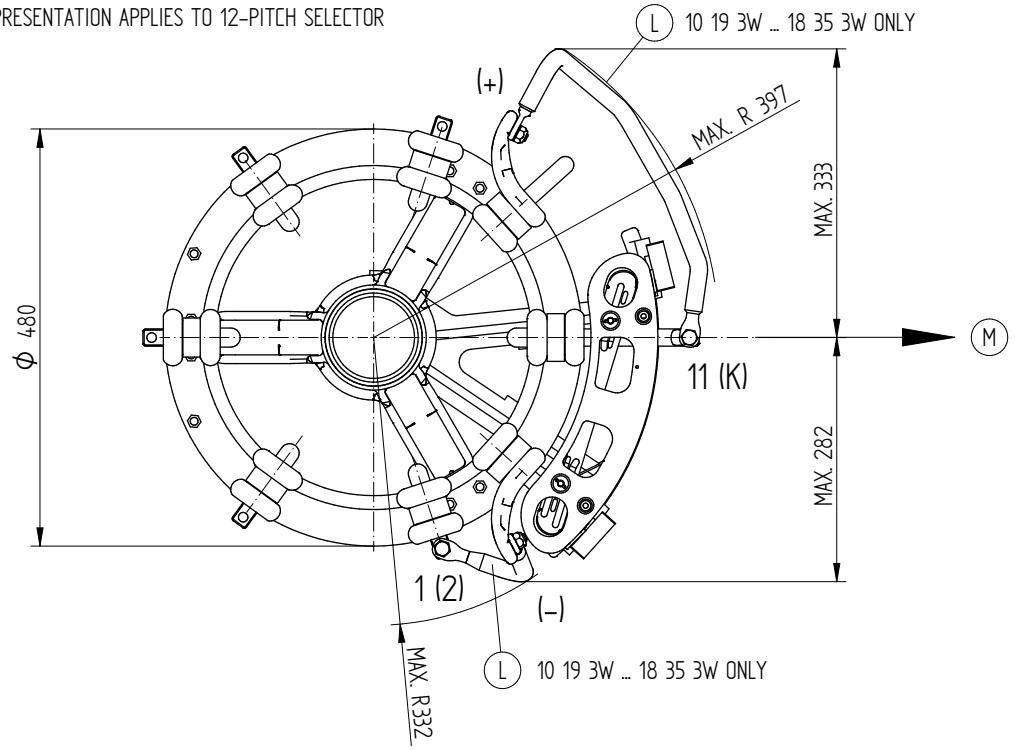

COARSE CHANGE-OVER SELECTOR

G – H (TYPE M / VM / VMS-C) AND E – E (TYPE VRC / VRE / VRC I HD / VRE I HD / VRS / VRM)

REPRESENTATION APPLIES TO 12-PITCH SELECTOR

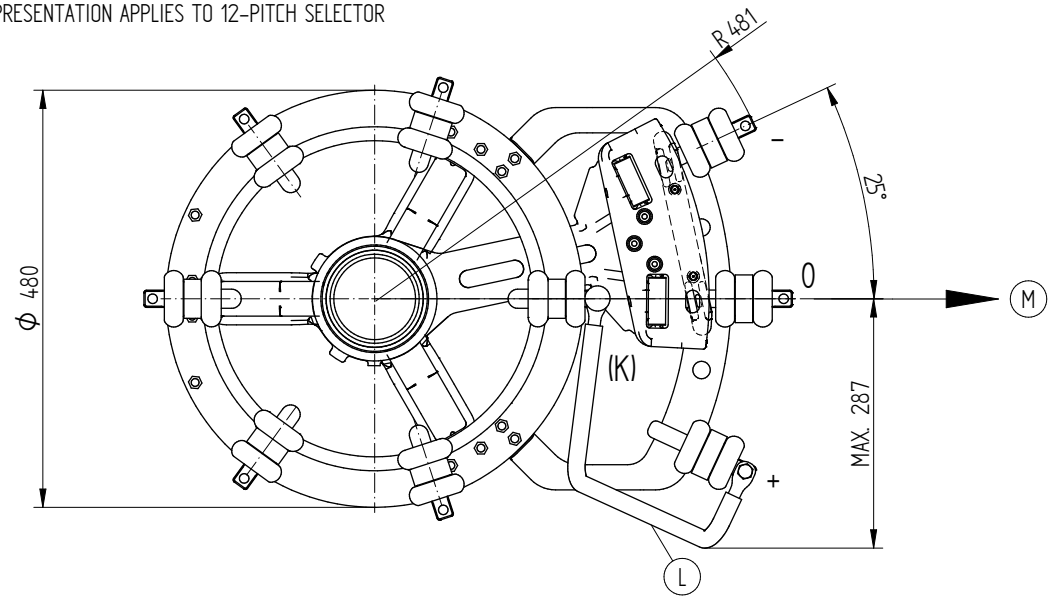

L SELECTOR SIZE B, C, D

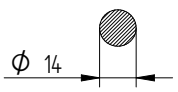

L SELECTOR SIZE DE

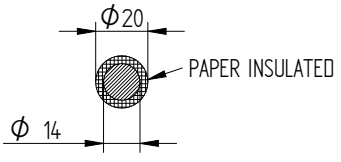

M DRIVE SIDE OF SELECTOR

L CONNECTING LEADS

THE DETAILED CONNECTION DIAGRAM IS BINDING FOR THE DESIGNATION OF THE CONNECTION CONTACTS

	DATE	NAME	DOCUMENT NO.	
DFTR.	13.07.2018	BUTERUS	SED 1474939 000 06	
CHKD.	16.07.2018	WILHELM	CHANGE NO.	SCALE
STAND.	16.07.2018	PRODASTSCHUK	1086956	1:3

DIMENSION IN mm EXCEPT AS NOTED

OLTC OILTAP® M / VACUTAP® VM®, VMS®-C, VRC, VRE, VRS, VRM
CONNECTING LEAD 3W AND 1G / 3G
M-SELECTOR SIZE B/C/D/DE

SERIAL NUMBER

MATERIAL NUMBER 7235904E

SHEET 1/1

© MASCHINENFABRIK REINHAUSEN GMBH 2018
THE REPRODUCTION, DISTRIBUTION AND UTILIZATION OF THIS DOCUMENT AS WELL AS THE COMMUNICATION OF ITS CONTENTS TO OTHERS WITHOUT EXPRESS AUTHORIZATION IS PROHIBITED. OFFENDERS WILL BE HELD LIABLE FOR THE PAYMENT OF DAMAGES. ALL RIGHTS RESERVED IN THE EVENT OF THE GRANT OF A PATENT, UTILITY MODEL OR DESIGN.

ARRANGEMENT OF CONTACT B

VRS I 1001
VRM I 1001

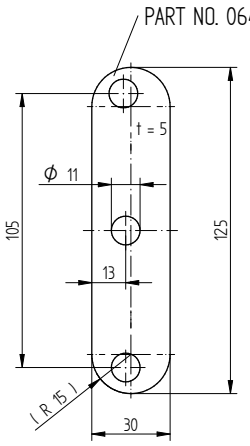

VRS I 1301
VRM I 1301

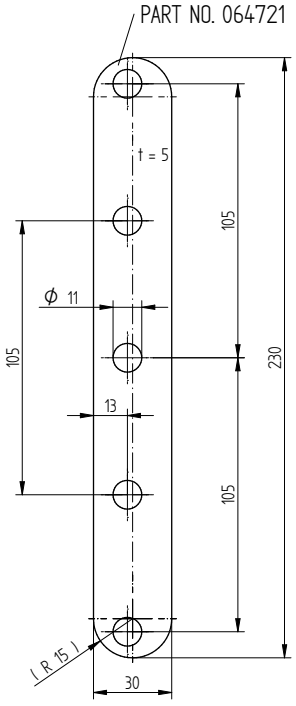

ARRANGEMENT OF CONTACT A

VRS I 1001 / 1301
VRM I 1001 / 1301

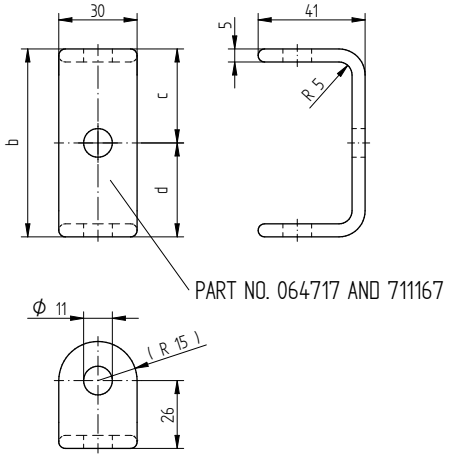

ARRANGEMENT OF CONTACT (see 890477:)	PART NO.	DIMENSION b	DIMENSION c	DIMENSION d
A WITHOUT CONNECTING LEAD	064717	97	48,5	48,5
A WITH CONNECTING LEAD	711167	91	48,5	42,5

INSTALLATION OF PARALLEL BRIDGES FOR ARRANGEMENT OF CONTACT A WITHOUT AND WITH CONNECTING LEAD FOR 3W CONNECTION

VRS I 1001
VRM I 1001

WITHOUT CONNECTING LEAD

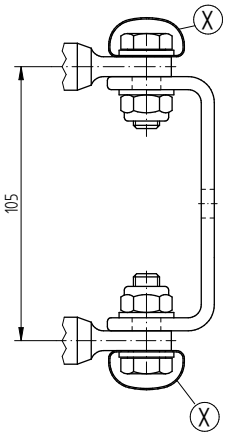

WITH CONNECTING LEAD

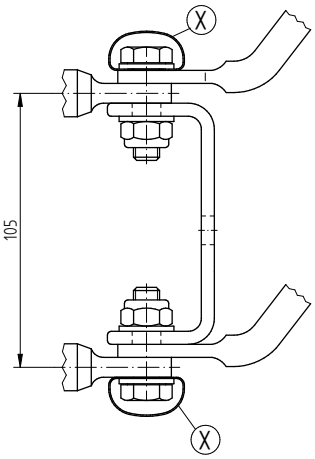

VRS I 1301
VRM I 1301

WITHOUT CONNECTING LEAD

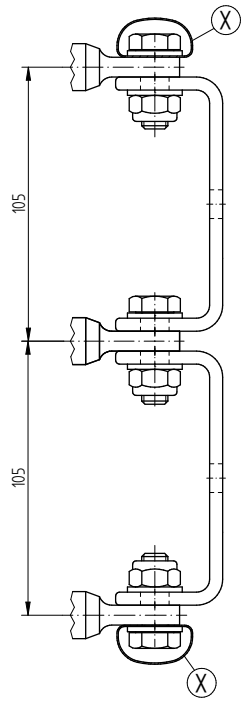

WITH CONNECTING LEAD

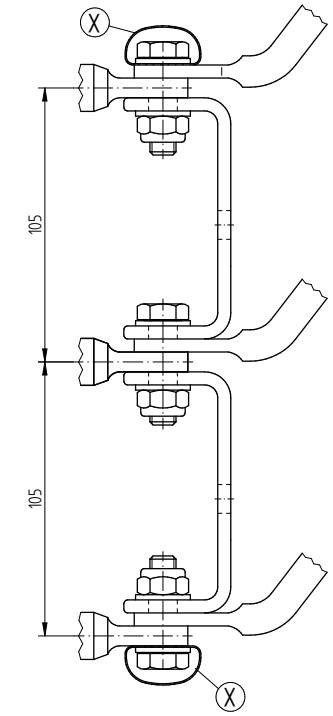

(X) ONLY FOR SELECTOR SIZE D AND DE

PLEASE NOTE: PARALLEL BRIDGES ARE NOT INCLUDED IN THE STANDARD DELIVERY.

	DATE	NAME	DOCUMENT NO.	
DFTR.	19.04.2018	RAEDLINGER	SED 6014108 001 00	
CHKD.	25.04.2018	HAUER	CHANGE NO.	SCALE
STAND.	25.04.2018	PRODASTSCHUK	1087395	1:1

DIMENSION IN mm EXCEPT AS NOTED

MR

Laststufenschalter VACUTAP® VR
VRS/VRM I 1001/1301 – SELECTOR SIZE B/C/D/DE
BRIDGES FOR PARALLEL CONNECTION OF SELECTOR CONNEC. CONTACT

SERIAL NUMBER

MATERIAL NUMBER 101170140E

SHEET 1/1

© MASCHINENFABRIK REINHAUSEN GMBH 2017
THE REPRODUCTION, DISTRIBUTION AND UTILIZATION OF THIS DOCUMENT AS WELL AS THE COMMUNICATION OF ITS CONTENTS TO OTHERS WITHOUT EXPRESS AUTHORIZATION IS PROHIBITED. OFFENDERS WILL BE HELD LIABLE FOR THE PAYMENT OF DAMAGES. ALL RIGHTS RESERVED IN THE EVENT OF THE GRANT OF A PATENT, UTILITY MODEL OR DESIGN.

SELECTOR SIZE E

THE SELECTION OF STRAIGHT CABLE SHOE OR ANGLE-SHAPED BY 90° MUST BE MADE BY THE TRANSFORMER MANUFACTURER FOR EACH CONNECTION CONTACT. (FOR MODEL WITH CHANGE-OVER SELECTOR: CONTACT "n MINUS 1" ALLOWS STRAIGHT CABLE SHOE ONLY, CONTACT "K" IS NOT FOR CUSTOMER'S USE.)

VARIANT 1

TAP SELECTOR AND CHANGE-OVER SELECTOR
CONNECTION CONTACT WITH STRAIGHT CABLE SHOE

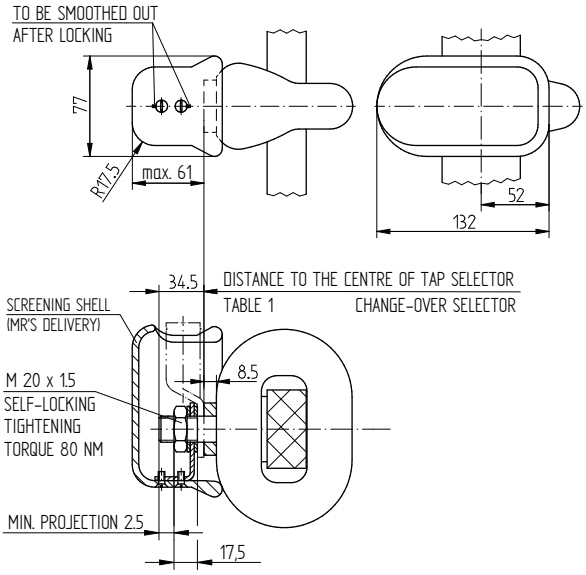

VARIANT 2

TAP SELECTOR AND CHANGE-OVER SELECTOR
CONNECTION CONTACT WITH 90° ANGLE CABLE SHOE

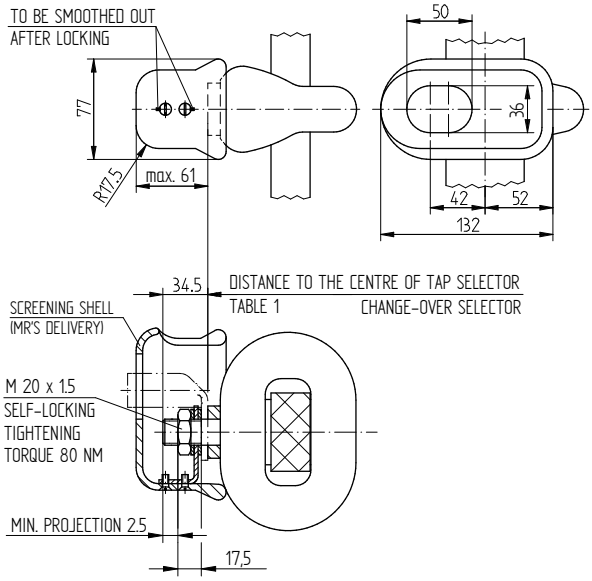

TABLE 1: DISTANCE TO THE CENTRE OF
TAP SELECTOR / CHANGE-OVER SELECTOR
(CONNECTING POINTS)

DESIGNATION OF CONNECTION CONTACTS	
TAP SELECTOR CONNECTION CONTACTS	352
CHANGE-OVER SELECTOR CONNECTION CONTACT "0"	176
CHANGE-OVER SELECTOR CONNECTION CONTACTS "+" AND "–"	383

THE ABOVE VARIANTS ARE APPLICABLE TO ONE SELECTOR CONNECTING LEAD FOR EACH CONNECTION CONTACT.
TWO SELECTOR CONNECTING LEADS FOR EACH CONNECTION CONTACTS AVAILABLE ON DEMAND.

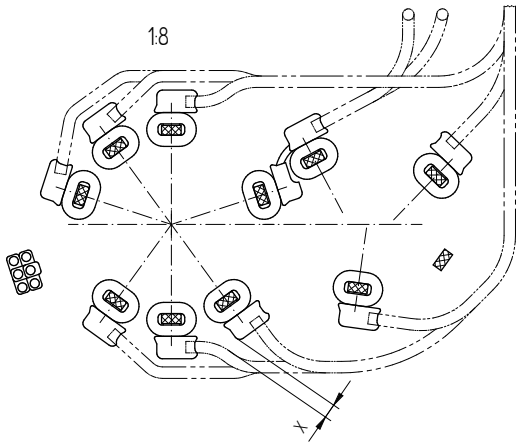

X MIN. BETWEEN SCREENING SHELL AND ADJACENT LEAD = 25 mm.
(RATED LIGHTNING IMPULSE WITHSTAND VOLTAGE 300 kV 1.2/50 AND LEAD ⌀18/⌀28)

SELECTOR SIZE C / D

TAP SELECTOR CONNECTION CONTACT AND
CHANGE-OVER SELECTOR CONNECTION CONTACT

1:1

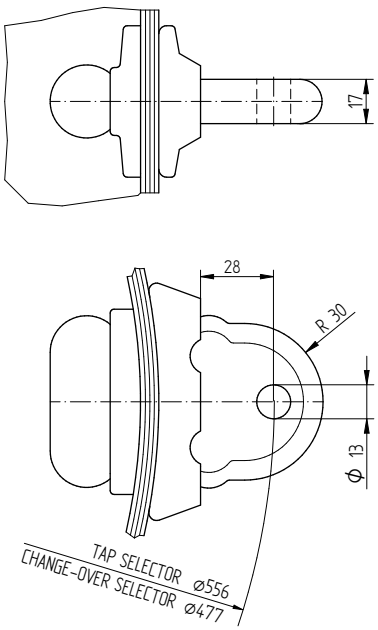

	DATE	NAME	DOCUMENT NO.	
DFTR.	15.05.2017	RAEDLINGER	SED 1055276 001 02	
CHKD.	09.06.2017	SCHAFBERGERT	CHANGE NO.	SCALE 1:2
STAND.	12.06.2017	PRODASTSCHUK	1081739	

DIMENSION IN mm EXCEPT AS NOTED

ON-LOAD TAP-CHANGER VACUTAP® VR
VRD/VRF/VRG – C/D/E TAP SELECTOR CONNECTION CONTACTS AND CHANGE-OVER SELECTOR CONNECTION CONTACTS

SERIAL NUMBER

MATERIAL NUMBER 8999413E

SHEET 1/1

4.6 電位接続ユニット

© MASCHINENFABRIK REINHAUSEN GMBH 2016
THE REPRODUCTION, DISTRIBUTION AND UTILIZATION OF THIS DOCUMENT AS WELL AS THE COMMUNICATION OF ITS CONTENTS TO OTHERS WITHOUT EXPRESS AUTHORIZATION IS PROHIBITED. OFFENDERS WILL BE HELD LIABLE FOR THE PAYMENT OF DAMAGES. ALL RIGHTS RESERVED IN THE EVENT OF THE GRANT OF A PATENT, UTILITY MODEL OR DESIGN.

WITH CHANGE-OVER SELECTOR (REVERSING / COARSE CHANGE-OVER SELECTOR) | W, G

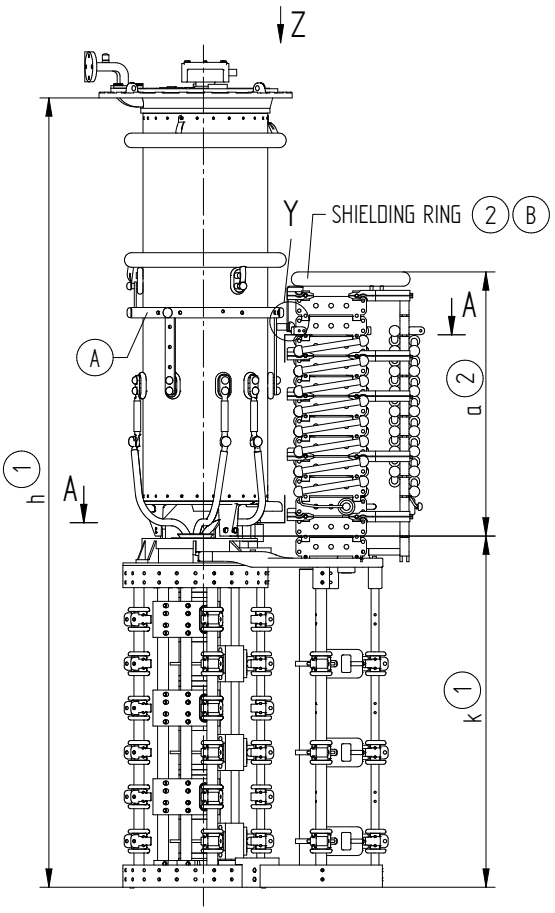

VRMIIIY VARIANT DISPLAYED

PRODUKT RANGE POTENTIAL CONNECTION UNIT WITH TIE-IN SWITCH WP/GP

ON-LOAD TAP-CHANGER VACUTAP®	NUMBER PHASES	CIRCUIT RESISTORS	Um [kV]	POTENTIAL NUMBER OF RESISTORS PER PHASES	MAX DIMENSIONS a [mm]
VRS	I	SERIES	72,5 ...420	3 ... 22	740
		PARALLEL	72,5 ... 362	2x3 ... 2x17	894
			420	2x3 ... 2x14	817
		3-FOLD PARALLEL	72,5 ... 362	3x3 ... 3x12	894
			420	3x3 ... 3x10	817
	II	SERIES	72,5 ... 362	3 ... 14	894
		PARALLEL		2x3 ... 2x7	
	III	SERIES	72,5 ... 245	3 ... 12	859
		PARALLEL		2x3 ... 2x5	
VRM VRH 650	I	SERIES	72,5 ... 420	3 ... 22	894
		PARALLEL	72,5 ... 362	2x3 ... 2x22	1048
			420	2x3 ... 2x20	971
		3-FOLD PARALLEL	72,5 ... 362	3x3 ... 3x16	1048
			420	3x3 ... 3x14	971
	II	SERIES	72,5 ... 362	3 ... 20	1048
		PARALLEL		2x3 ... 2x10	
	III	SERIES	72,5 ... 245	3 ... 16	1013
		PARALLEL		2x3 ... 2x7	
VRL VRH 1300 VRH 2622	I	SERIES	72,5 ... 420	3 ... 22	740
		PARALLEL		2x3 ... 2x22	1048
		3-FOLD PARALLEL	72,5 ... 300	3x3 ... 3x18	975
			362 ... 420	3x3 ... 3x16	1048
	II	SERIES	72,5 ... 362	3 ... 22	
		PARALLEL		2x3 ... 2x10	
	III	SERIES	72,5 ... 245	3 ... 18	975
		PARALLEL		2x3 ... 2x8	

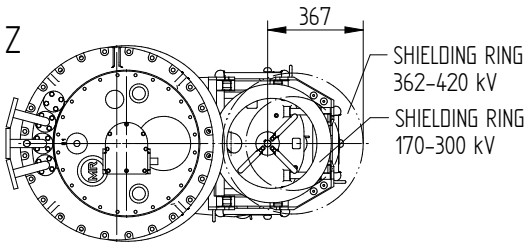

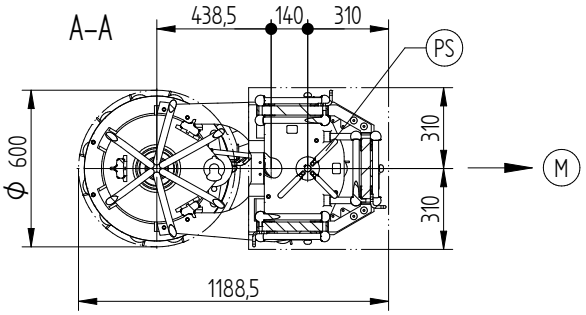

NUMBER AND POSITION OF CONNECTION CONTACT (2)

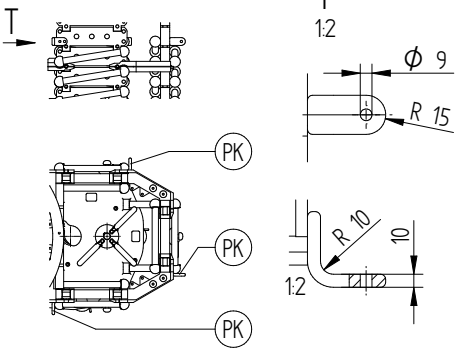

SCREW CONNECTION BETWEEN POTENTIAL CONNECTION UNIT AND TAKE-OFF RING (2)

THE SCREW CONNECTION (IF AVAILABLE) IS MADE BY THE TRANSFORMER MANUFACTURER.

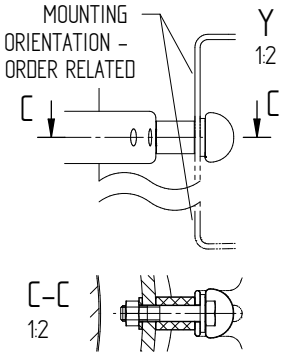

(M) - DRIVE SIDE OF SELECTOR
(A) - ON-LOAD TAP-CHANGER CURRENT TAKE-OFF TERMINAL
(B) - IS CONNECTED TO POTENTIAL OF (A)
(PK) - CONNECTION CONTACT
(PS) - TIE-IN SWITCH
(1) - REFER TO DIMENSION DRAWING
(2) - IS ORDER RELATED, REFER TO ORDER RELATED DIMESION DRAWING
- THE DETAILED CONNECTION DIAGRAM IS BINDING FOR THE DESIGNATION OF THE CONNECTION CONTACTS AND PHASES

	DATE	NAME	DOCUMENT NO.	
DFTR.	20.10.2016	CTETPRAKTIK2	SED 5159743 001 00	
CHKD.	20.10.2016	HILTNER	CHANGE NO.	SCALE
STAND.	20.10.2016	PRODASTSCHUK	1077565	1:1

DIMENSION IN mm EXCEPT AS NOTED

ON-LOAD TAP-CHANGER VACUTAP® VR
VR S/M/L/H – POTENTIAL CONNECTION UNIT WP/GP – RC/RD/RDE DIMENSION DRAWING

SERIAL NUMBER –

MATERIAL NUMBER 100180040E | SHEET 1/1

A1

© MASCHINENFABRIK REINHAUSEN GMBH 2016
THE REPRODUCTION, DISTRIBUTION AND UTILIZATION OF THIS DOCUMENT AS WELL AS THE COMMUNICATION OF ITS CONTENTS TO OTHERS WITHOUT EXPRESS AUTHORIZATION IS PROHIBITED. OFFENDERS WILL BE HELD LIABLE FOR THE PAYMENT OF DAMAGES. ALL RIGHTS RESERVED IN THE EVENT OF THE GRANT OF A PATENT, UTILITY MODEL OR DESIGN.

WITH CHANGE-OVER SELECTOR (REVERSING / COARSE CHANGE-OVER SELECTOR)	W, G

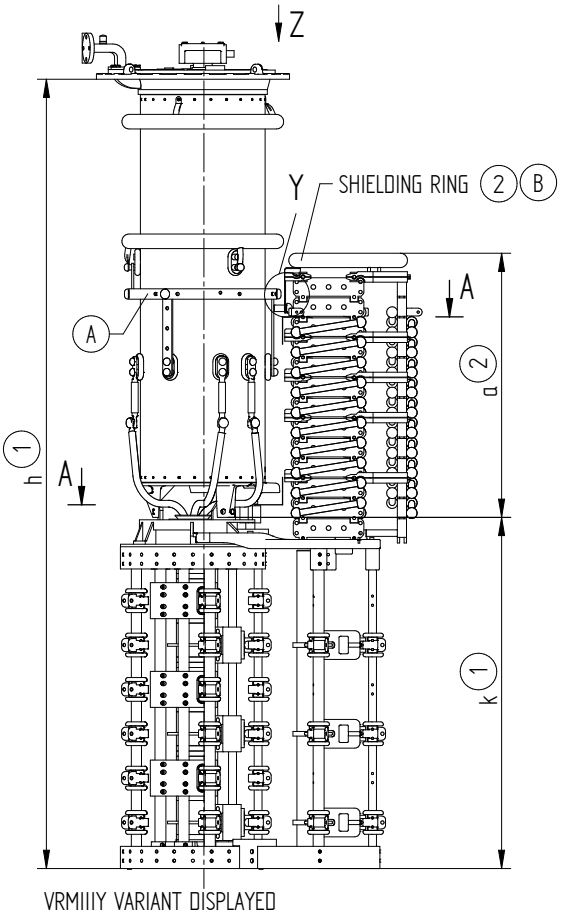

VRMIIIY VARIANT DISPLAYED

PRODUKT RANGE POTENTIAL CONNECTION UNIT WITHOUT TIE-IN SWITCH WR/GR

ON-LOAD TAP-CHANGER VACUTAP®	NUMBER PHASES	CIRCUIT RESISTORS	Um [kV]	POTENTIAL NUMBER OF RESISTORS PER PHASES	MAX DIMENSIONS a [mm]
VRS	I	SERIES	72,5 ...420	3 ... 22	663
		PARALLEL	72,5 ... 362	2x3 ... 2x22	894
			420	2x3 ... 2x19	817
		3-FOLD PARALLEL	72,5 ... 362	3x3 ... 3x16	894
			420	3x3 ... 3x14	817
	II	SERIES	72,5 ... 362	3 ... 20	894
		PARALLEL		2x3 ... 2x10	
	III	SERIES	72,5 ... 245	3 ... 16	859
		PARALLEL		2x3 ... 2x7	
VRM VRH 650	I	SERIES	72,5 ... 420	3 ... 22	663
		PARALLEL		2x3 ... 2x22	894
		3-FOLD PARALLEL	72,5 ... 362	3x3 ... 3x20	1048
			420	3x3 ... 3x18	971
	II	SERIES	72,5 ... 362	3 ... 22	1048
		PARALLEL		2x3 ... 2x13	
	III	SERIES	72,5 ... 245	3 ... 20	1013
		PARALLEL		2x3 ... 2x9	
VRL VRH 1300 VRH 2622	I	SERIES	72,5 ... 420	3 ... 22	663
		PARALLEL		2x3 ... 2x22	971
		3-FOLD PARALLEL	72,5 ... 300	3x3 ... 3x22	975
			362 ... 420	3x3 ... 3x20	1048
	II	SERIES	72,5 ... 362	3 ... 22	
		PARALLEL		2x3 ... 2x13	
	III	SERIES	72,5 ... 245	3 ... 22	975
		PARALLEL		2x3 ... 2x10	

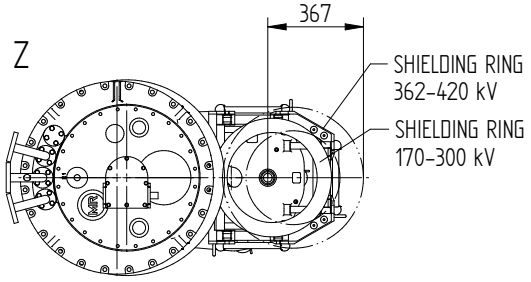

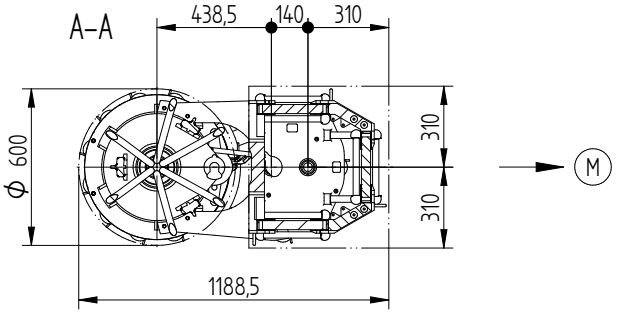

NUMBER AND POSITION OF CONNECTION CONTACT (2)

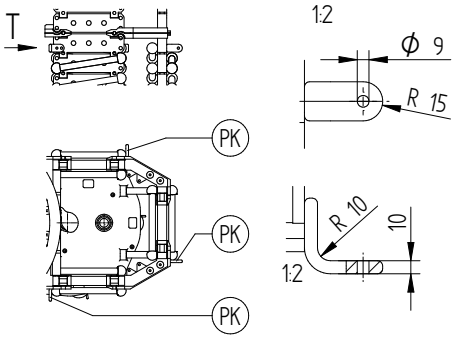

SCREW CONNECTION BETWEEN POTENTIAL CONNECTION UNIT AND TAKE-OFF RING (2)

THE SCREW CONNECTION (IF AVAILABLE) IS MADE BY THE TRANSFORMER MANUFACTURER.

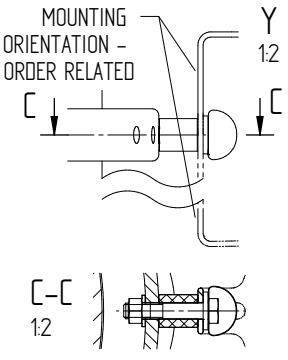

(M) - DRIVE SIDE OF SELECTOR
(A) - ON-LOAD TAP-CHANGER CURRENT TAKE-OFF TERMINAL
(B) - IS CONNECTED TO POTENTIAL OF (A)
(PK) - CONNECTION CONTACT
(1) - REFER TO DIMENSION DRAWING
(2) - IS ORDER RELATED, REFER TO ORDER RELATED DIMESION DRAWING
-THE DETAILED CONNECTION DIAGRAM IS BINDING FOR THE DESIGNATION OF THE CONNECTION CONTACTS AND PHASES

	DATE	NAME	DOCUMENT NO.	
DFTR.	18.10.2016	CTETPRAKTIK2	SED 5159886 001 00	
CHKD.	20.10.2016	HILTNER	CHANGE NO.	SCALE
STAND.	20.10.2016	PRODASTSCHUK	1077565	1:10

DIMENSION IN mm EXCEPT AS NOTED

ON-LOAD TAP-CHANGER VACUTAP® VR
VR S/M/L/H – POTENTIAL CONNECTION UNIT WR/GR – RC/RD/RDE DIMENSION DRAWING

SERIAL NUMBER

MATERIAL NUMBER 100180080E

SHEET 1/1

A1

© MASCHINENFABRIK REINHAUSEN GMBH 2016
THE REPRODUCTION, DISTRIBUTION AND UTILIZATION OF THIS DOCUMENT AS WELL AS THE COMMUNICATION OF ITS CONTENTS TO OTHERS WITHOUT EXPRESS AUTHORIZATION IS PROHIBITED. OFFENDERS WILL BE HELD LIABLE FOR THE PAYMENT OF DAMAGES. ALL RIGHTS RESERVED IN THE EVENT OF THE GRANT OF A PATENT, UTILITY MODEL OR DESIGN.

WITH CHANGE-OVER SELECTOR (REVERSING / COARSE CHANGE-OVER SELECTOR)	W, G

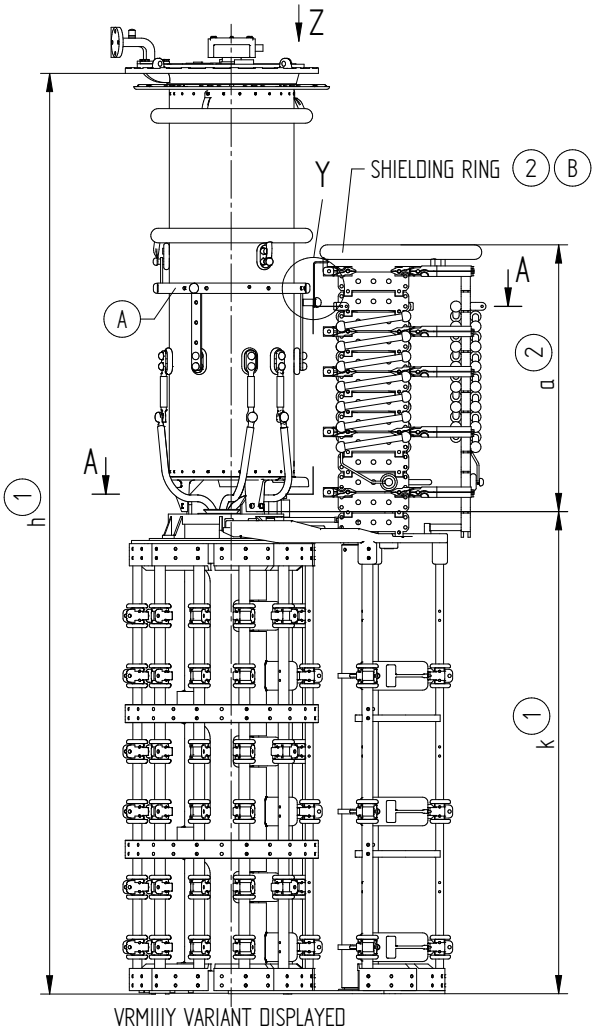

VRMIIIY VARIANT DISPLAYED

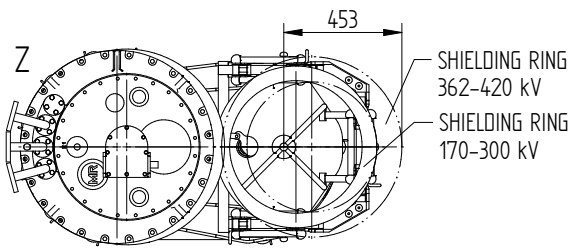

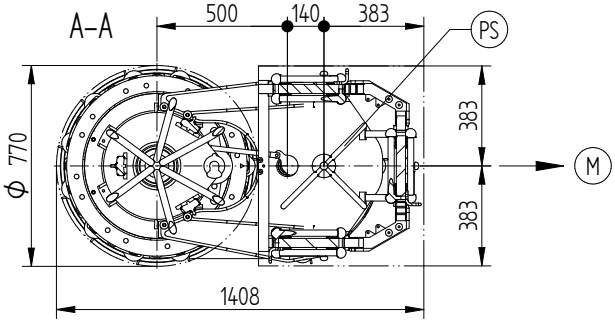

NUMBER AND POSITION OF CONNECTION CONTACT (2)

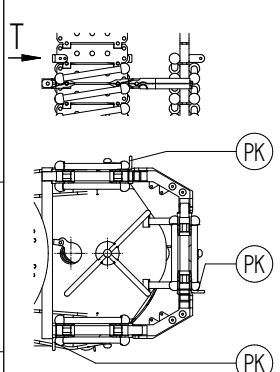

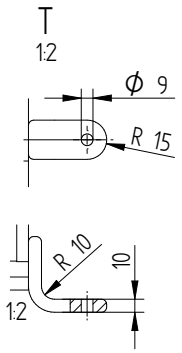

SCREW CONNECTION BETWEEN POTENTIAL CONNECTION UNIT AND TAKE-OFF RING (2)

THE SCREW CONNECTION (IF AVAILABLE) IS MADE BY THE TRANSFORMER MANUFACTURER.

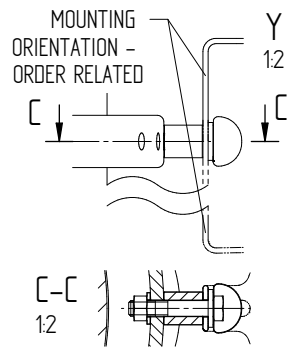

(M) – DRIVE SIDE OF SELECTOR
(A) – ON-LOAD TAP-CHANGER CURRENT TAKE-OFF TERMINAL
(B) – IS CONNECTED TO POTENTIAL OF (A)
(PK) – CONNECTION CONTACT
(PS) – TIE-IN SWITCH
(1) – REFER TO DIMENSION DRAWING
(2) – IS ORDER RELATED, REFER TO ORDER RELATED DIMESION DRAWING
–THE DETAILED CONNECTION DIAGRAM IS BINDING FOR THE DESIGNATION OF THE CONNECTION CONTACTS AND PHASES

	DATE	NAME	DOCUMENT NO.
DFTR.	18.10.2016	CTETPRAKTIK2	SED 5160053 001 00
CHKD.	20.10.2016	HILTNER	CHANGE NO. / SCALE
STAND.	20.10.2016	PRODASTSCHUK	1077565 / 1:1

DIMENSION IN mm EXCEPT AS NOTED

ON-LOAD TAP-CHANGER VACUTAP® VR
VR S/M/L/H/X – POTENTIAL CONNECTION UNIT WP/GP – RE/RF/RES DIMENSION DRAWING

SERIAL NUMBER –
MATERIAL NUMBER 100180110E
SHEET 1/2
A1

© MASCHINENFABRIK REINHAUSEN GMBH 2016
THE REPRODUCTION, DISTRIBUTION AND UTILIZATION OF THIS DOCUMENT AS WELL AS THE COMMUNICATION OF ITS CONTENTS TO OTHERS WITHOUT EXPRESS AUTHORIZATION IS PROHIBITED. OFFENDERS WILL BE HELD LIABLE FOR THE PAYMENT OF DAMAGES. ALL RIGHTS RESERVED IN THE EVENT OF THE GRANT OF A PATENT, UTILITY MODEL OR DESIGN.

PRODUCT RANGE POTENTIAL CONNECTION UNIT WITH TIE-IN SWITCH WP/GP							
ON-LOAD TAP-CHANGER VACUTAP®	NUMBER PHASES	SELECTOR DESIGN	CIRCUIT RESISTORS	Um [kV]	POTENTIAL NUMBER OF RESISTORS PER PHASES	MAX. DIMENSIONS a [mm]	SEPARATE TRANSPORT POTENTIAL CONNECTION UNIT
VRS	I	RE, RF	SERIES	72,5 ... 420	3 ... 22	832	NO
			PARALLEL	72,5 ...362	2x3 ... 2x14	909	
				420	2x3 ... 2x10	832	
			3-FOLD PARALLEL	72,5 ... 362	3x3 ... 3x10	909	
				420	3x3 ... 3x8	832	
	II		SERIES	72,5 ... 362	3 ... 12	909	
			PARALLEL		2x3 ... 2x5		
	III	RE	SERIES	72,5 ... 123	3 ... 10	869	
				170 ... 245	3 ... 8	667	
					9 ... 10	869	YES
		RF		72,5 ... 245	3 ... 8	667	NO
					9 ... 10	869	YES
		RE	PARALLEL	72,5 ... 123	2x3 ... 2x4	744	NO
				170 ... 245	2x3	667	
					2x4	869	YES
		RF		72,5 ... 245	2x3	667	NO
					2x4	869	YES
VRM VRH 650	I	RE, RF	SERIES	72,5 ... 420	3 ... 22	832	NO
			PARALLEL	72,5 ... 362	2x3 ... 2x20	1063	
				420	2x3 ... 2x16	986	
			3-FOLD PARALLEL	72,5 ... 362	3x3 ... 3x14	1063	
				420	3x3 ... 3x12	986	
	II		SERIES	72,5 ... 362	3 ... 18	1063	
			PARALLEL		2x3 ... 2x9		
	III	RE	SERIES	72,5 ... 245	3 ... 12	821	
					13 ... 14	1023	YES
		RF			3 ... 4	496	NO
					5 ... 14	1023	YES
		RE	PARALLEL		2x3 ... 2x5	821	NO
					2x6	1023	YES
		RF			2x3 ... 2x6		
VRL VRH 1300 VRH 2622	I	RE, RF	SERIES	72,5 ... 420	3 ... 22	832	NO
			PARALLEL		2x3 ... 2x22	1140	
			3-FOLD PARALLEL	72,5 ... 362	3x3 ... 3x18	1217	
				420	3x3 ... 3x16	1140	
	II		SERIES	72,5 ... 362	3 ... 22		
			PARALLEL		2x3 ... 2x11	1217	
	III	RE	SERIES	72,5 ... 245	3 ... 8	667	
					9 ... 18	1177	YES
		RF			3 ... 4	496	NO
					5 ... 18	1177	YES
		RE	PARALLEL		2x3	667	NO
					2x4 ... 2x8	1177	YES
		RF			2x3 ... 2x8		
VRX	I	RES	SERIES	72,5 ... 300	3 ...12	821	NO
					13 ... 14	1023	YES
				362	3 ... 8	832	NO
					9 ... 14	1063	YES
			PARALLEL	72,5 ... 300	2x3 ... 2x5	821	NO
					2x6	1023	YES
				362	2x3	832	NO
					2x4 ... 2x6	1063	YES

	DATE	NAME	DOCUMENT NO.	
DFTR.	18.10.2016	CTETPRAKTIK2	SED 5160053 001 00	
CHKD.	20.10.2016	HILTNER	CHANGE NO.	SCALE
STAND.	20.10.2016	PRODASTSCHUK	1077565	1:1

DIMENSION IN mm EXCEPT AS NOTED

ON-LOAD TAP-CHANGER VACUTAP® VR
VR S/M/L/H/X – POTENTIAL CONNECTION UNIT WP/GP – RE/RF/RES
DIMENSION DRAWING

SERIAL NUMBER –

MATERIAL NUMBER 100180110E

SHEET 2/2

A1

© MASCHINENFABRIK REINHAUSEN GMBH 2016
THE REPRODUCTION, DISTRIBUTION AND UTILIZATION OF THIS DOCUMENT AS WELL AS THE COMMUNICATION OF ITS CONTENTS TO OTHERS WITHOUT EXPRESS AUTHORIZATION IS PROHIBITED. OFFENDERS WILL BE HELD LIABLE FOR THE PAYMENT OF DAMAGES. ALL RIGHTS RESERVED IN THE EVENT OF THE GRANT OF A PATENT, UTILITY MODEL OR DESIGN.

WITH CHANGE-OVER SELECTOR (REVERSING / COARSE CHANGE-OVER SELECTOR)	W, G

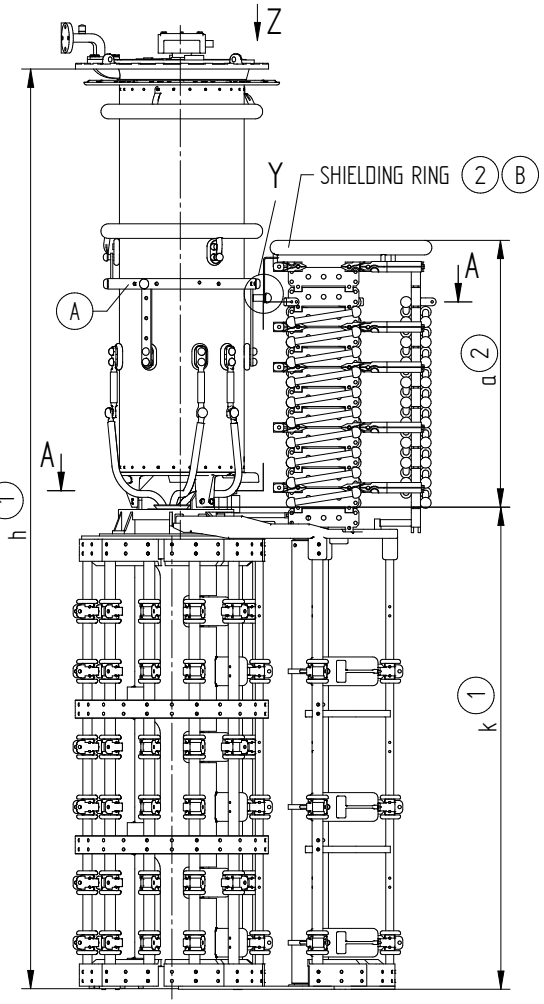

VRMIIIY VARIANT DISPLAYED

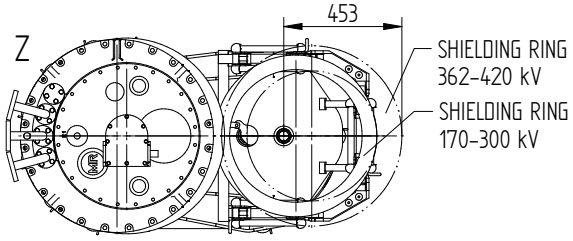

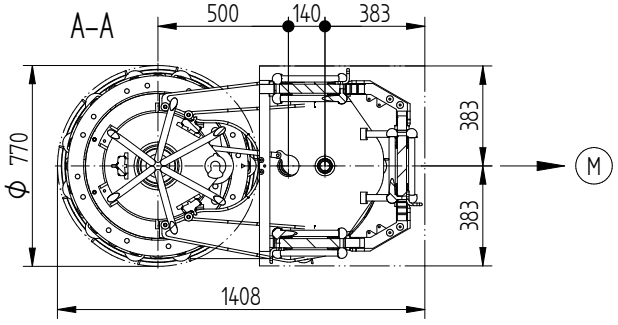

NUMBER AND POSITION OF CONNECTION CONTACT (2)

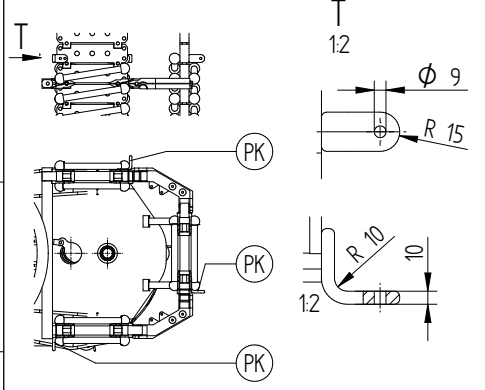

SCREW CONNECTION BETWEEN POTENTIAL CONNECTION UNIT AND TAKE-OFF RING (2)

THE SCREW CONNECTION (IF AVAILABLE) IS MADE BY THE TRANSFORMER MANUFACTURER.

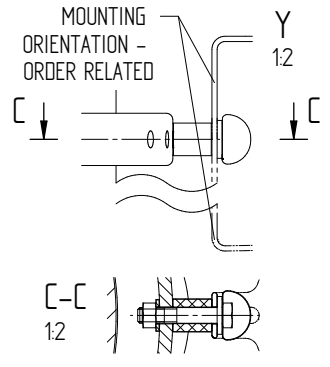

(M) – DRIVE SIDE OF SELECTOR
(A) – ON-LOAD TAP-CHANGER CURRENT TAKE-OFF TERMINAL
(B) – IS CONNECTED TO POTENTIAL OF (A)
(PK) – CONNECTION CONTACT
(1) – REFER TO DIMENSION DRAWING
(2) – IS ORDER RELATED, REFER TO ORDER RELATED DIMESION DRAWING
– THE DETAILED CONNECTION DIAGRAM IS BINDING FOR THE DESIGNATION OF THE CONNECTION CONTACTS AND PHASES

	DATE	NAME	DOCUMENT NO.	
DFTR.	18.10.2016	CTETPRAKTIK2	SED 5160136 001 00	
CHKD.	20.10.2016	HILTNER	CHANGE NO.	SCALE
STAND.	20.10.2016	PRODASTSCHUK	1077565	1:10

DIMENSION IN mm EXCEPT AS NOTED

ON-LOAD TAP-CHANGER VACUTAP® VR
VR S/M/L/H – POTENTIAL CONNECTION UNIT WR/GR – RE/RF DIMENSION DRAWING

SERIAL NUMBER –

MATERIAL NUMBER 100180130E

SHEET 1/2

A1

© MASCHINENFABRIK REINHAUSEN GMBH 2016
THE REPRODUCTION, DISTRIBUTION AND UTILIZATION OF THIS DOCUMENT AS WELL AS THE COMMUNICATION OF ITS CONTENTS TO OTHERS WITHOUT EXPRESS AUTHORIZATION IS PROHIBITED. OFFENDERS WILL BE HELD LIABLE FOR THE PAYMENT OF DAMAGES. ALL RIGHTS RESERVED IN THE EVENT OF THE GRANT OF A PATENT, UTILITY MODEL OR DESIGN.

PRODUCT RANGE POTENTIAL CONNECTION UNIT WITHOUT TIE-IN SWITCH WR/GR							
ON-LOAD TAP-CHANGER VACUTAP®	NUMBER PHASES	SELECTOR DESIGN	CIRCUIT RESISTORS	Um [kV]	POTENTIAL NUMBER OF RESISTORS PER PHASES	MAX. DIMENSIONS a [mm]	SEPARATE TRANSPORT POTENTIAL CONNECTION UNIT
VRS	I	RE, RF	SERIES	72,5 ... 420	3 ... 22	678	NO
			PARALLEL	72,5 ...362	2x3 ... 2x20	909	
				420	2x3 ... 2x18	832	
			3-FOLD PARALLEL	72,5 ... 362	3x3 ... 3x16	909	
				420	3x3 ... 3x14	832	
	II		SERIES	72,5 ... 362	3 ... 20	909	
			PARALLEL		2x3 ... 2x10		
	III	RE	SERIES	72,5 ... 123	3 ... 16	744	
				170 ... 245	3 ... 14	667	
					15 ... 16	869	YES
		RF		72,5 ... 245	3 ... 14	667	NO
					15 ... 16	869	YES
		RE	PARALLEL	72,5 ... 123	2x3 ... 2x7	744	NO
				170 ... 245	2x3 ... 2x6	667	
					2x7	869	YES
		RF		72,5 ... 245	2x3 ... 2x6	667	NO
					2x7	869	YES
VRM VRH 650	I	RE, RF	SERIES	72,5 ... 420	3 ... 22	678	NO
			PARALLEL		2x3 ... 2x22	968	
			3-FOLD PARALLEL	72,5 ... 362	3x3 ... 3x20	1063	
				420	3x3 ... 3x18	986	
	II		SERIES	72,5 ... 362	3 ... 22	1063	
			PARALLEL		2x3 ... 2x13		
	III	RE	SERIES	72,5 ... 245	3 ... 18	821	
					19 ... 20	1023	YES
		RF			3 ... 10	496	NO
					11 ... 20	1023	YES
		RE	PARALLEL		2x3 ... 2x8	821	NO
					2x9	1023	YES
		RF			2x3 ... 2x4	496	NO
					2x5 ... 2x9	1023	YES
VRL VRH 1300 VRH 2622	I	RE, RF	SERIES	72,5 ... 420	3 ... 22	678	NO
			PARALLEL		2x3 ... 2x22	968	
			3-FOLD PARALLEL		3x3 ... 3x22	1140	
	II		SERIES	72,5 ... 362	3 ... 22	1063	
			PARALLEL		2x3 ... 2x16	1217	
	III	RE	SERIES	72,5 ... 245	3 ... 14	667	
					15 ... 22	975	YES
		RF			3 ... 10	496	NO
					11 ... 22	975	YES
		RE	PARALLEL		2x3 ... 2x6	667	NO
					2x7 ... 2x11	1177	YES
		RF			2x3 ... 2x4	496	NO
					2x5 ... 2x11	1177	YES

	DATE	NAME	DOCUMENT NO.	
DFTR.	18.10.2016	CTETPRAKTIK2	SED 5160136 001 00	
CHKD.	20.10.2016	HILTNER	CHANGE NO.	SCALE
STAND.	20.10.2016	PRODASTSCHUK	1077565	1:10

DIMENSION IN mm EXCEPT AS NOTED

ON-LOAD TAP-CHANGER VACUTAP® VR
VR S/M/L/H – POTENTIAL CONNECTION UNIT WR/GR – RE/RF
DIMENSION DRAWING

SERIAL NUMBER –

MATERIAL NUMBER 100180130E

SHEET 2/2

A1

MASCHINENFABRIK REINHAUSEN GMBH COPYRIGHT RESERVED
THE REPRODUCTION, DISTRIBUTION AND UTILIZATION OF THIS DOCUMENT AS WELL AS THE COMMUNICATION OF ITS CONTENTS TO OTHERS WITHOUT EXPRESS AUTHORIZATION IS PROHIBITED. OFFENDERS WILL BE HELD LIABLE FOR THE PAYMENT OF DAMAGES. ALL RIGHTS RESERVED IN THE EVENT OF THE GRANT OF A PATENT, UTILITY MODEL OR DESIGN.

WITH CHANGE-OVER SELECTOR (REVERSING / COARSE CHANGE-OVER SELECTOR)	W, G

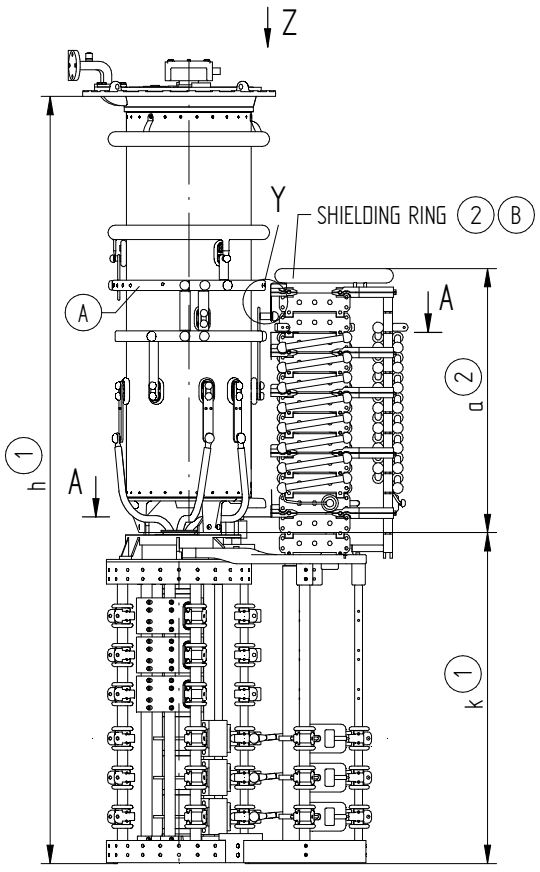

VRL I 2601 VARIANT DISPLAYED

PRODUKT RANGE POTENTIAL CONNECTION UNIT WITH TIE-IN SWITCH WP/GP					
ON-LOAD TAP-CHANGER VACUTAP®	NUMBER PHASES	CIRCUIT RESISTORS	Um [kV]	POTENTIAL NUMBER OF RESISTORS PER PHASES	MAX DIMENSIONS a [mm]
VRL I 1801 VRL I 2001 VRL I 2401 VRL I 2601 VRL I 3001 VRL I 3201	I	SERIES	72,5 ... 420	3 ... 22	894
		PARALLEL	72,5 ... 362	2x3 ... 2x22	1048
			420	2x3 ... 2x20	971
		3-FOLD PARALLEL	72,5 ... 362	3x3 ... 3x16	1048
			420	3x3 ... 3x14	971

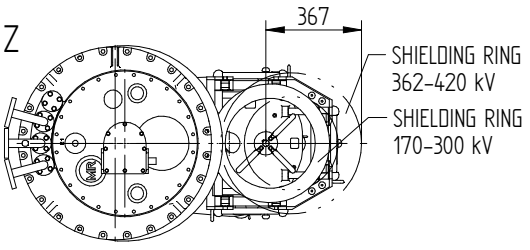

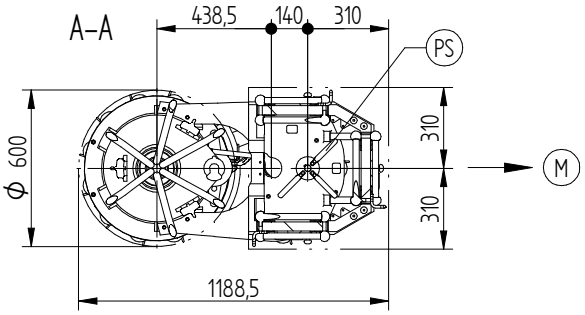

NUMBER AND POSITION OF CONNECTION CONTACT (2)

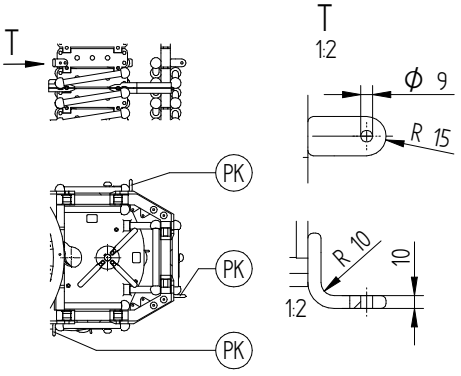

SCREW CONNECTION BETWEEN POTENTIAL CONNECTION UNIT AND CONNECTOR (2)

THE SCREW CONNECTION (IF AVAILABLE) IS MADE BY THE TRANSFORMER MANUFACTURER.

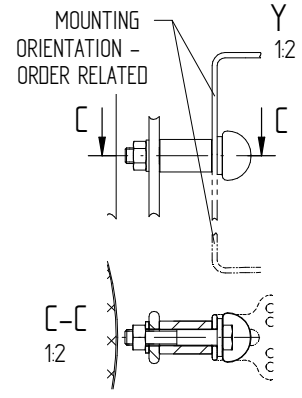

(M) - DRIVE SIDE OF SELECTOR
(A) - ON-LOAD TAP-CHANGER CURRENT TAKE-OFF TERMINAL
(B) - IS CONNECTED TO POTENTIAL OF (A)
(PK) - CONNECTION CONTACT
(PS) - TIE-IN SWITCH
(1) - REFER TO DIMENSION DRAWING
(2) - IS ORDER RELATED, REFER TO ORDER RELATED DIMESION DRAWING
- THE DETAILED CONNECTION DIAGRAM IS BINDING FOR THE DESIGNATION OF THE CONNECTION CONTACTS AND PHASES

	DATE	NAME	DOCUMENT NO.	
DFTR.	13.12.2021	RAEDLINGER	SED 8495418 001 00	
CHKD.	13.12.2021	MENZELS	CHANGE NO.	SCALE 1:10
STAND.	14.12.2021	WANNINGER	1103709	

DIMENSION IN mm EXCEPT AS NOTED

ON-LOAD TAP-CHANGER VACUTAP® VR®
VRL I 1801 ... 3201 - POTENTIAL CONNECTION UNIT WP/GP - RC/RD/RDE DIMENSION DRAWING

SERIAL NUMBER -

MATERIAL NUMBER 1016676706

SHEET 1/1

MASCHINENFABRIK REINHAUSEN GMBH COPYRIGHT RESERVED
THE REPRODUCTION, DISTRIBUTION AND UTILIZATION OF THIS DOCUMENT AS WELL AS THE COMMUNICATION OF ITS CONTENTS TO OTHERS WITHOUT EXPRESS AUTHORIZATION IS PROHIBITED. OFFENDERS WILL BE HELD LIABLE FOR THE PAYMENT OF DAMAGES. ALL RIGHTS RESERVED IN THE EVENT OF THE GRANT OF A PATENT, UTILITY MODEL OR DESIGN.

WITH CHANGE-OVER SELECTOR (REVERSING / COARSE CHANGE-OVER SELECTOR)	W, G

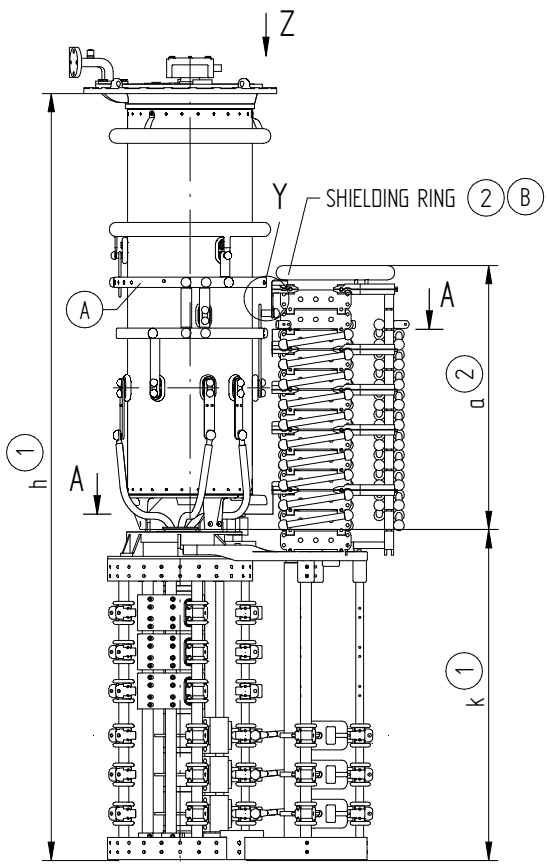

VRL I 2601 VARIANT DISPLAYED

PRODUKT RANGE POTENTIAL CONNECTION UNIT WITHOUT TIE-IN SWITCH WR/GR					
ON-LOAD TAP-CHANGER VACUTAP®	NUMBER PHASES	CIRCUIT RESISTORS	Um [kV]	POTENTIAL NUMBER OF RESISTORS PER PHASES	MAX DIMENSIONS a [mm]
VRL I 1801 VRL I 2001 VRL I 2401 VRL I 2601 VRL I 3001 VRL I 3201	I	SERIES	72,5 ... 420	3 ... 22	663
		PARALLEL		2x3 ... 2x22	894
		3-FOLD PARALLEL	72,5 ... 362	3x3 ... 3x20	1048
			420	3x3 ... 3x18	971

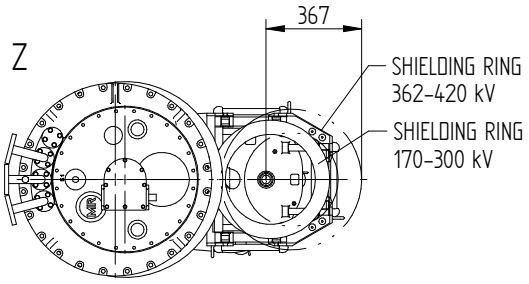

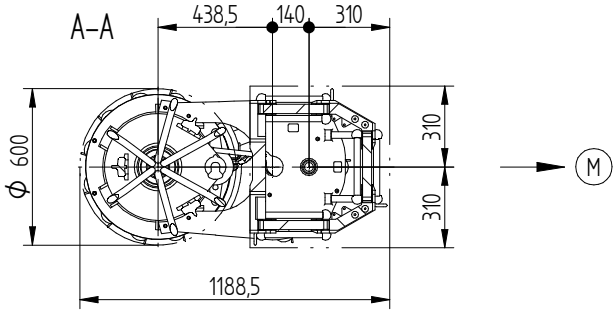

NUMBER AND POSITION OF CONNECTION CONTACT (2)

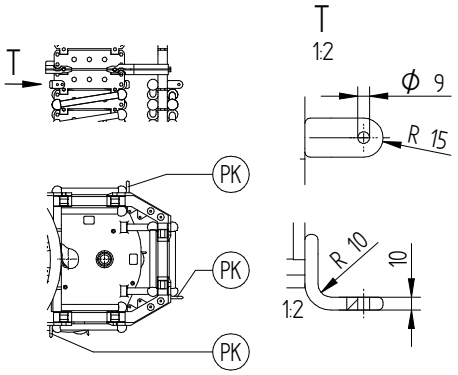

SCREW CONNECTION BETWEEN POTENTIAL CONNECTION UNIT AND CONNECTOR (2)

THE SCREW CONNECTION (IF AVAILABLE) IS MADE BY THE TRANSFORMER MANUFACTURER.

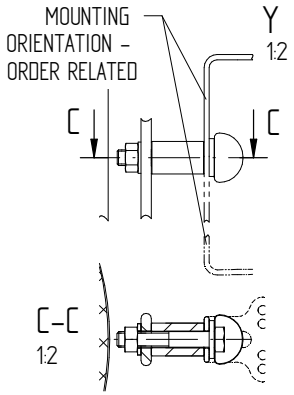

(M) - DRIVE SIDE OF SELECTOR
(A) - ON-LOAD TAP-CHANGER CURRENT TAKE-OFF TERMINAL
(B) - IS CONNECTED TO POTENTIAL OF (A)
(PK) - CONNECTION CONTACT
(1) - REFER TO DIMENSION DRAWING
(2) - IS ORDER RELATED, REFER TO ORDER RELATED DIMESION DRAWING
-THE DETAILED CONNECTION DIAGRAM IS BINDING FOR THE DESIGNATION OF THE CONNECTION CONTACTS AND PHASES

	DATE	NAME	DOCUMENT NO.	
DFTR.	13.12.2021	RAEDLINGER	SED 8483828 001 00	
CHKD.	13.12.2021	MENZELS	CHANGE NO.	SCALE 1:10
STAND.	14.12.2021	WANNINGER	1103709	

DIMENSION IN mm EXCEPT AS NOTED

ON-LOAD TAP-CHANGER VACUTAP® VR®
VRL I 1801 ... 3201 - POTENTIAL CONNECTION UNIT WR/GR - RC/RD/RDE DIMENSION DRAWING

SERIAL NUMBER

MATERIAL NUMBER 1016676660E

SHEET 1/1

MASCHINENFABRIK REINHAUSEN GMBH COPYRIGHT RESERVED
THE REPRODUCTION, DISTRIBUTION AND UTILIZATION OF THIS DOCUMENT AS WELL AS THE COMMUNICATION OF ITS CONTENTS TO OTHERS WITHOUT EXPRESS AUTHORIZATION IS PROHIBITED. OFFENDERS WILL BE HELD LIABLE FOR THE PAYMENT OF DAMAGES. ALL RIGHTS RESERVED IN THE EVENT OF THE GRANT OF A PATENT, UTILITY MODEL OR DESIGN.

WITH CHANGE-OVER SELECTOR (REVERSING / COARSE CHANGE-OVER SELECTOR)	W, G

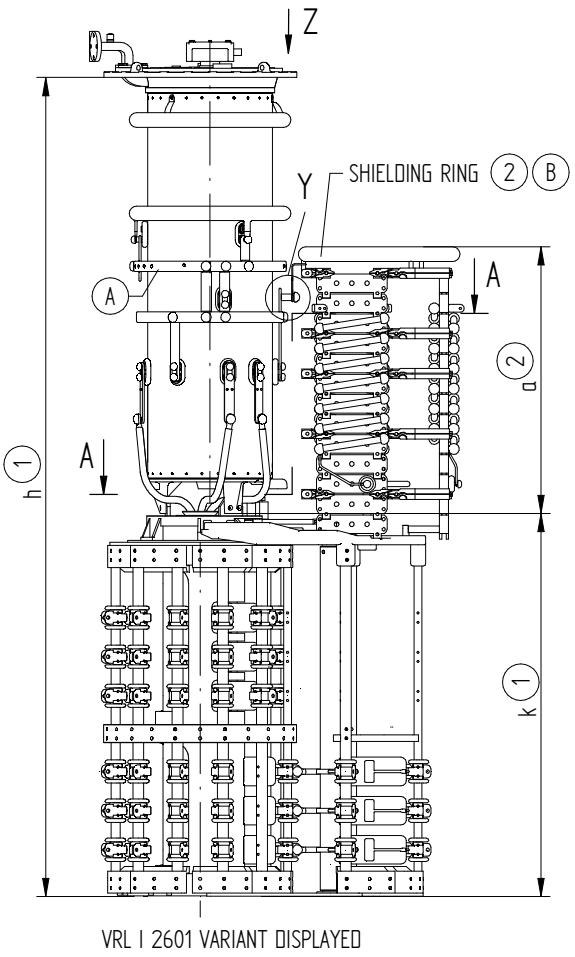

VRL I 2601 VARIANT DISPLAYED

PRODUCT RANGE POTENTIAL CONNECTION UNIT WITH TIE-IN SWITCH WP/GP					
ON-LOAD TAP-CHANGER VACUTAP®	NUMBER PHASES	CIRCUIT RESISTORS	Um [kV]	POTENTIAL NUMBER OF RESISTORS PER PHASES	MAX. DIMENSIONS a [mm]
VRL I 1801 VRL I 2001 VRL I 2401 VRL I 2601 VRL I 3001 VRL I 3201	I	SERIES	72,5 ... 420	3 ... 22	832
		PARALLEL	72,5 ... 362	2x3 ... 2x20	1063
			420	2x3 ... 2x16	986
		3-FOLD PARALLEL	72,5 ... 362	3x3 ... 3x14	1063
			420	3x3 ... 3x12	986

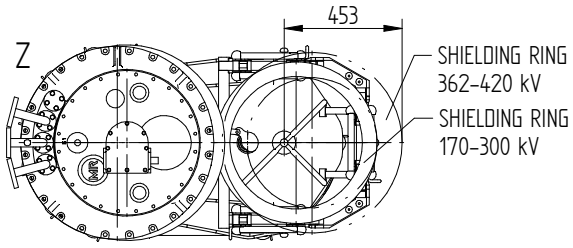

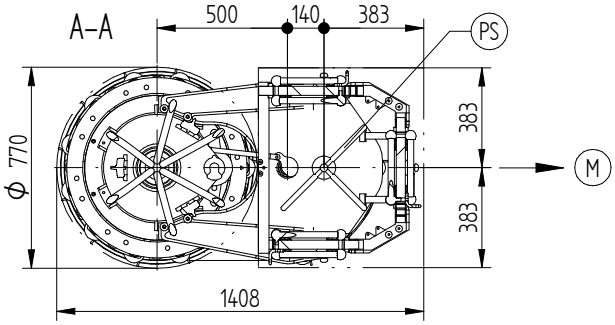

NUMBER AND POSITION OF CONNECTION CONTACT (2)

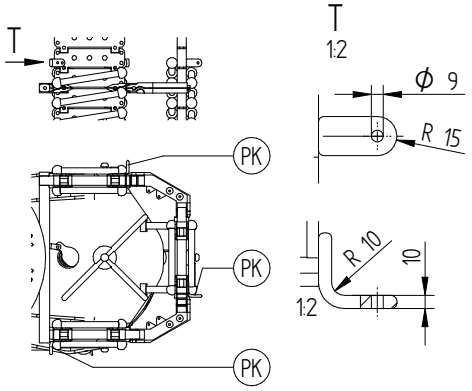

SCREW CONNECTION BETWEEN POTENTIAL CONNECTION UNIT AND CONNECTOR (2)

THE SCREW CONNECTION (IF AVAILABLE) IS MADE BY THE TRANSFORMER MANUFACTURER.

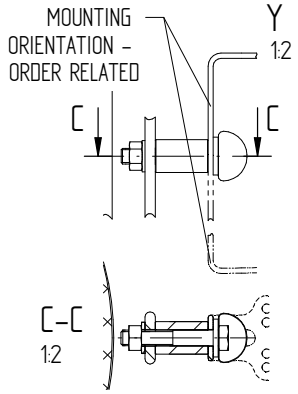

(M) - DRIVE SIDE OF SELECTOR
(A) - ON-LOAD TAP-CHANGER CURRENT TAKE-OFF TERMINAL
(B) - IS CONNECTED TO POTENTIAL OF (A)
(PK) - CONNECTION CONTACT
(PS) - TIE-IN SWITCH
(1) - REFER TO DIMENSION DRAWING
(2) - IS ORDER RELATED, REFER TO ORDER RELATED DIMESION DRAWING
-THE DETAILED CONNECTION DIAGRAM IS BINDING FOR THE DESIGNATION OF THE CONNECTION CONTACTS AND PHASES

	DATE	NAME	DOCUMENT NO.	
DFTR.	13.12.2021	RAEDLINGER	SED 8495707 001 00	
CHKD.	13.12.2021	MENZELS	CHANGE NO.	SCALE 1:10
STAND.	14.12.2021	WANNINGER	1103709	

DIMENSION IN mm EXCEPT AS NOTED

ON-LOAD TAP-CHANGER VACUTAP® VR®
VRL I 1801 ... 3201 - POTENTIAL CONNECTION UNIT WP/GP - RE DIMENSION DRAWING

SERIAL NUMBER -
MATERIAL NUMBER 1016676806
SHEET 1/1

MASCHINENFABRIK REINHAUSEN GMBH COPYRIGHT RESERVED
THE REPRODUCTION, DISTRIBUTION AND UTILIZATION OF THIS DOCUMENT AS WELL AS THE COMMUNICATION OF ITS CONTENTS TO OTHERS WITHOUT EXPRESS AUTHORIZATION IS PROHIBITED. OFFENDERS WILL BE HELD LIABLE FOR THE PAYMENT OF DAMAGES. ALL RIGHTS RESERVED IN THE EVENT OF THE GRANT OF A PATENT, UTILITY MODEL OR DESIGN.

WITH CHANGE-OVER SELECTOR (REVERSING / COARSE CHANGE-OVER SELECTOR)	W, G

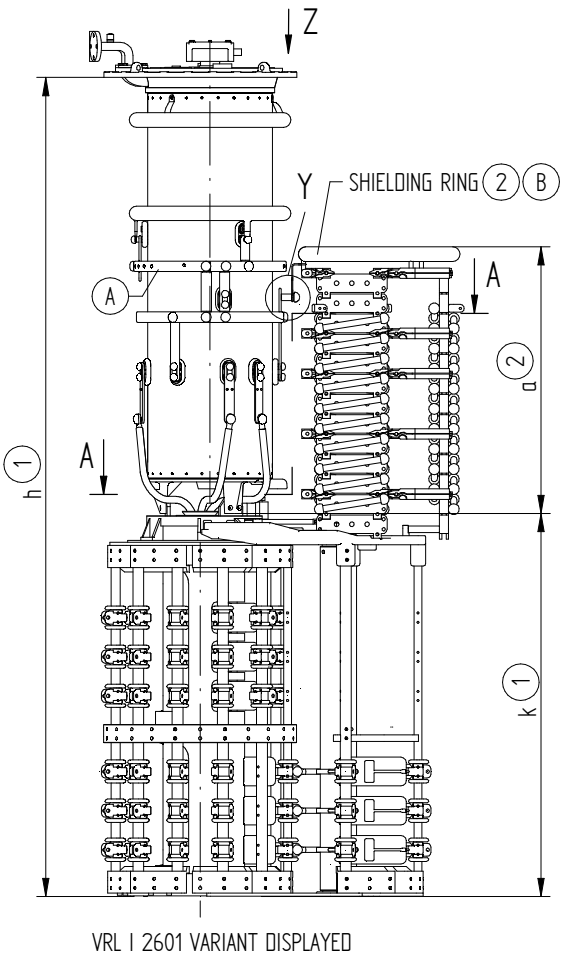

VRL I 2601 VARIANT DISPLAYED

PRODUCT RANGE POTENTIAL CONNECTION UNIT WITHOUT TIE-IN SWITCH WR/GR					
ON-LOAD TAP-CHANGER VACUTAP®	NUMBER PHASES	CIRCUIT RESISTORS	Um [kV]	POTENTIAL NUMBER OF RESISTORS PER PHASES	MAX. DIMENSIONS a [mm]
VRL I 1801 VRL I 2001 VRL I 2401 VRL I 2601 VRL I 3001 VRL I 3201	I	SERIES	72,5 ... 420	3 ... 22	678
		PARALLEL		2x3 ... 2x22	968
		3-FOLD PARALLEL	72,5 ... 362	3x3 ... 3x20	1063
			420	3x3 ... 3x18	986

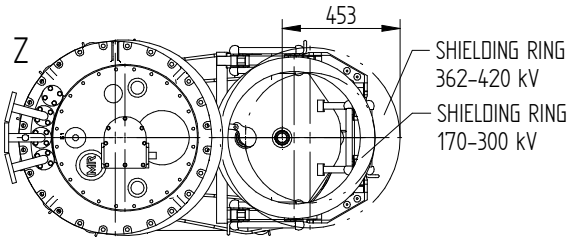

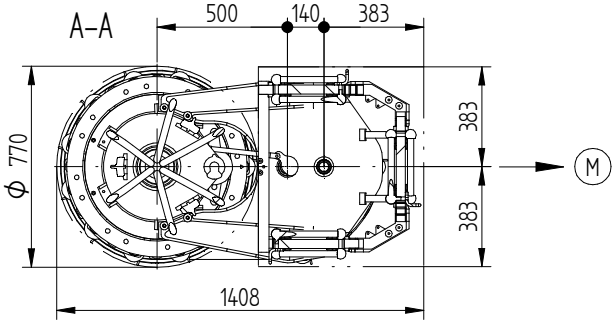

NUMBER AND POSITION OF CONNECTION CONTACT (2)

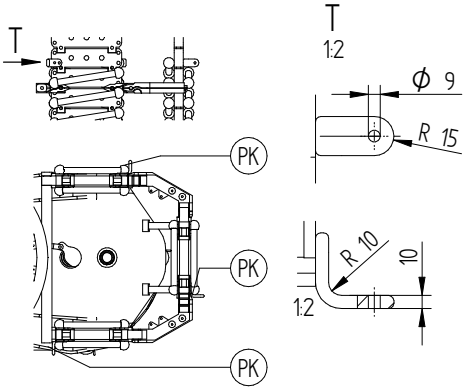

SCREW CONNECTION BETWEEN POTENTIAL CONNECTION UNIT AND CONNECTOR (2)

THE SCREW CONNECTION (IF AVAILABLE) IS MADE BY THE TRANSFORMER MANUFACTURER.

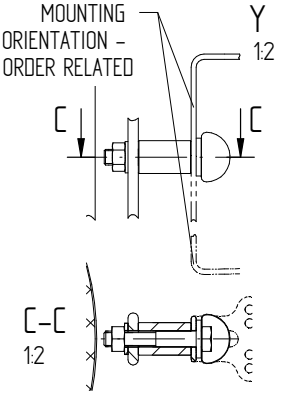

(M) - DRIVE SIDE OF SELECTOR
(A) - ON-LOAD TAP-CHANGER CURRENT TAKE-OFF TERMINAL
(B) - IS CONNECTED TO POTENTIAL OF (A)
(PK) - CONNECTION CONTACT
(1) - REFER TO DIMENSION DRAWING
(2) - IS ORDER RELATED, REFER TO ORDER RELATED DIMESION DRAWING
- THE DETAILED CONNECTION DIAGRAM IS BINDING FOR THE DESIGNATION OF THE CONNECTION CONTACTS AND PHASES

	DATE	NAME	DOCUMENT NO.	
DFTR.	13.12.2021	RAEDLINGER	SED 8496246 001 00	
CHKD.	13.12.2021	MENZELS	CHANGE NO.	SCALE 1:10
STAND.	14.12.2021	WANNINGER	1103709	

DIMENSION IN mm EXCEPT AS NOTED

ON-LOAD TAP-CHANGER VACUTAP® VR®
VRL I 1801 ... 3201 - POTENTIAL CONNECTION UNIT WR/GR - RE DIMENSION DRAWING

SERIAL NUMBER -
MATERIAL NUMBER 101667690E
SHEET 1/1

© MASCHINENFABRIK REINHAUSEN GMBH 2016
THE REPRODUCTION, DISTRIBUTION AND UTILIZATION OF THIS DOCUMENT AS WELL AS THE COMMUNICATION OF ITS CONTENTS TO OTHERS WITHOUT EXPRESS AUTHORIZATION IS PROHIBITED. OFFENDERS WILL BE HELD LIABLE FOR THE PAYMENT OF DAMAGES. ALL RIGHTS RESERVED IN THE EVENT OF THE GRANT OF A PATENT, UTILITY MODEL OR DESIGN.

WITH CHANGE-OVER SELECTOR (REVERSING / COARSE CHANGE-OVER SELECTOR)	W, G

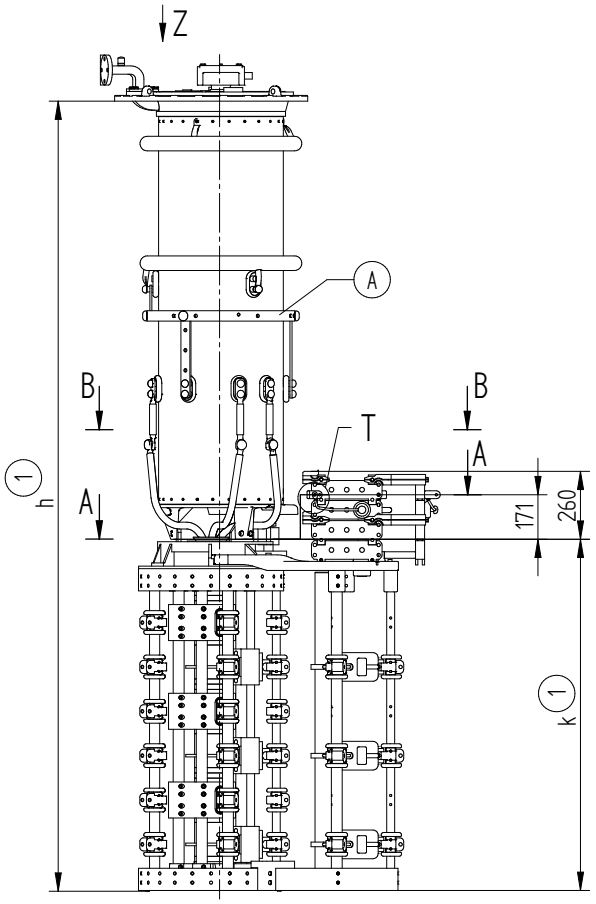

VRMIIIY VARIANT DISPLAYED

(M) – DRIVE SIDE OF SELECTOR
(A) – ON-LOAD TAP-CHANGER CURRENT TAKE-OFF TERMINAL
(PK) – CONNECTION CONTACT
(PS) – TIE-IN SWITCH
(1) – REFER TO DIMENSION DRAWING
– THE DETAILED CONNECTION DIAGRAM IS BINDING FOR THE DESIGNATION OF THE CONNECTION CONTACTS AND PHASES

POSITION OF CONNECTION CONTACT – ORDER RELATED

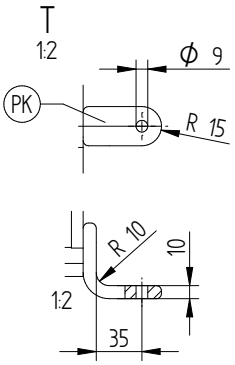

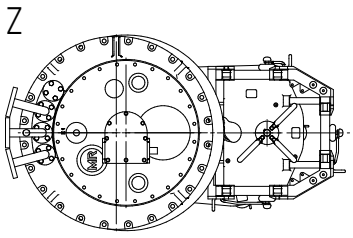

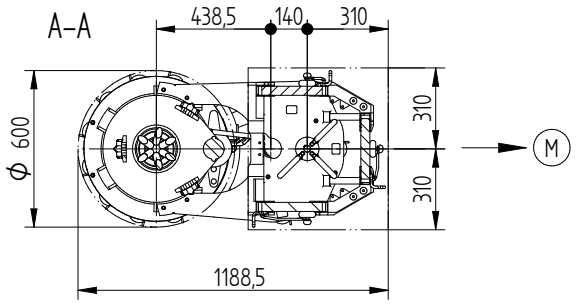

B–B

3-PHASE DESIGN

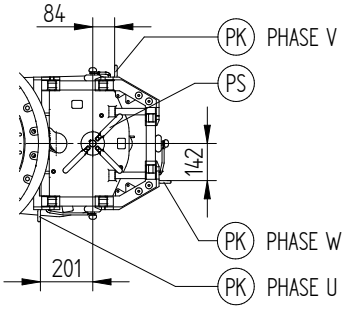

2-PHASE DESIGN

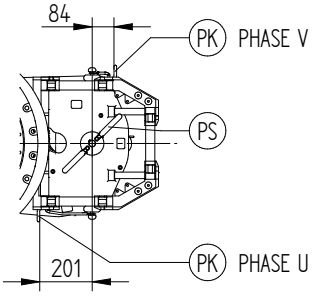

1-PHASE DESIGN

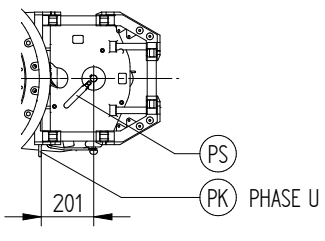

	DATE	NAME	DOCUMENT NO.	
DFTR.	18.10.2016	CTETPRAKTIK2	SED 5128451 001 01	
CHKD.	19.10.2016	HILTNER	CHANGE NO.	SCALE
STAND.	20.10.2016	PRODASTSCHUK	1077548	1:10

DIMENSION IN mm EXCEPT AS NOTED

SELECTOR SIZE RC/RD/RDE TIE-IN SWITCH WS/GS DIMENSION DRAWING

SERIAL NUMBER

MATERIAL NUMBER 100177251E

SHEET 1/1

A1

© MASCHINENFABRIK REINHAUSEN GMBH 2016
THE REPRODUCTION, DISTRIBUTION AND UTILIZATION OF THIS DOCUMENT AS WELL AS THE COMMUNICATION OF ITS CONTENTS TO OTHERS WITHOUT EXPRESS AUTHORIZATION IS PROHIBITED. OFFENDERS WILL BE HELD LIABLE FOR THE PAYMENT OF DAMAGES. ALL RIGHTS RESERVED IN THE EVENT OF THE GRANT OF A PATENT, UTILITY MODEL OR DESIGN.

WITH CHANGE-OVER SELECTOR (REVERSING / COARSE CHANGE-OVER SELECTOR)	W, G

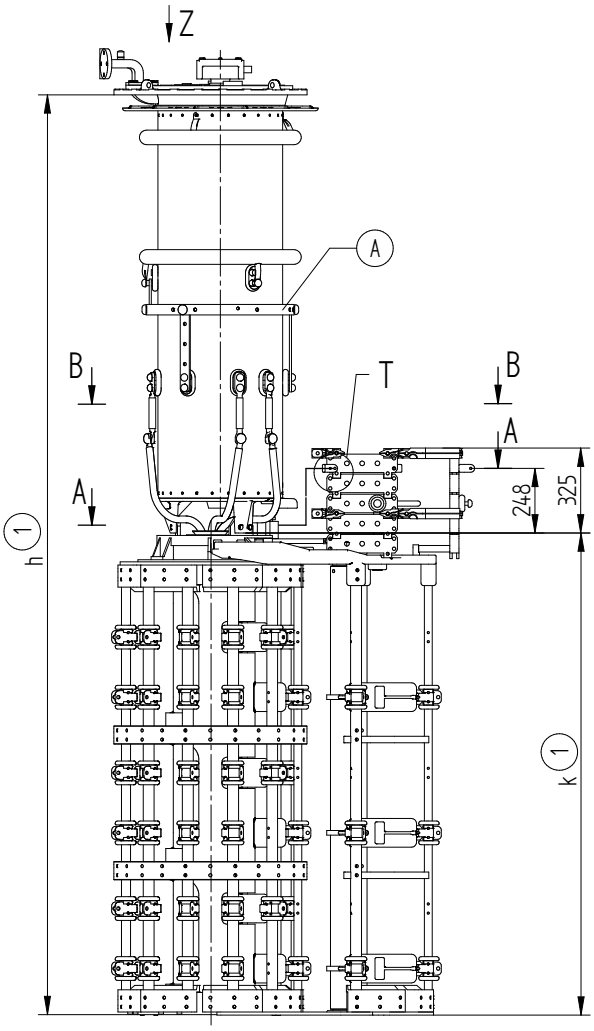

VRMIIIY VARIANT DISPLAYED

(M) – DRIVE SIDE OF SELECTOR
(A) – ON-LOAD TAP-CHANGER CURRENT TAKE-OFF TERMINAL
(PK) – CONNECTION CONTACT
(PS) – TIE-IN SWITCH
(1) – REFER TO DIMENSION DRAWING

–THE DETAILED CONNECTION DIAGRAM IS BINDING FOR THE DESIGNATION OF THE CONNECTION CONTACTS AND PHASES

POSITION OF CONNECTION CONTACT – ORDER RELATED

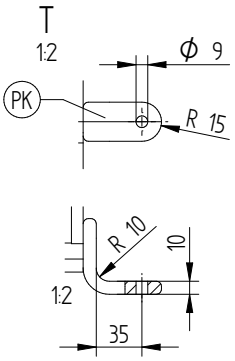

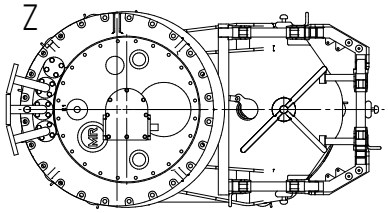

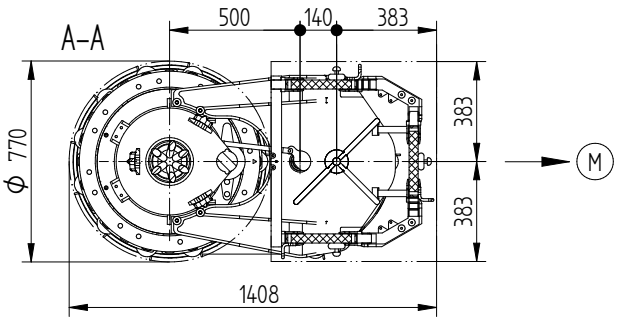

B–B

3-PHASE DESIGN

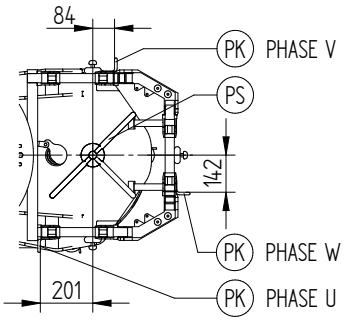

2-PHASE DESIGN

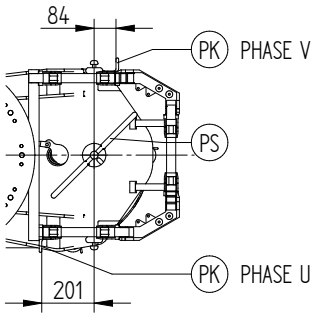

1-PHASE DESIGN

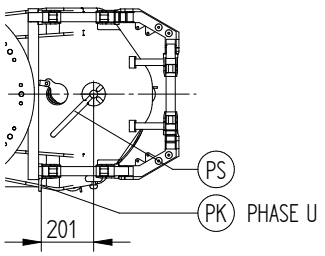

	DATE	NAME	DOCUMENT NO.	
DFTR.	18.10.2016	CTETPRAKTIK2	SED 5160555 001 00	
CHKD.	19.10.2016	HILTNER	CHANGE NO.	SCALE
STAND.	20.10.2016	PRODASTSCHUK	1077548	1:10

DIMENSION IN mm EXCEPT AS NOTED

SELECTOR SIZE RE/RF/RES TIE-IN SWITCH WS/GS DIMENSION DRAWING

SERIAL NUMBER –

MATERIAL NUMBER 100175331E

SHEET 1/1

A1

© MASCHINENFABRIK REINHAUSEN GMBH 2016
THE REPRODUCTION, DISTRIBUTION AND UTILIZATION OF THIS DOCUMENT AS WELL AS THE COMMUNICATION OF ITS CONTENTS TO OTHERS WITHOUT EXPRESS AUTHORIZATION IS PROHIBITED. OFFENDERS WILL BE HELD LIABLE FOR THE PAYMENT OF DAMAGES. ALL RIGHTS RESERVED IN THE EVENT OF THE GRANT OF A PATENT, UTILITY MODEL OR DESIGN.

DESIGN:
M I
RM I
VM I
VRC I
VRE I
VRS I
VRM I

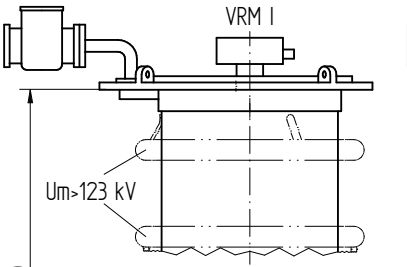

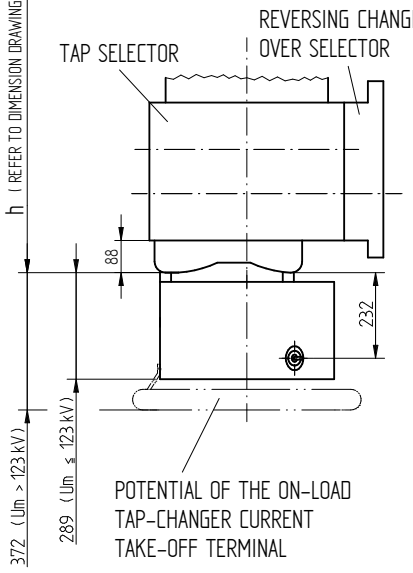

DESIGN:
M II
RM II
VM II
VRC II
VRE II
VRS II
VRM II

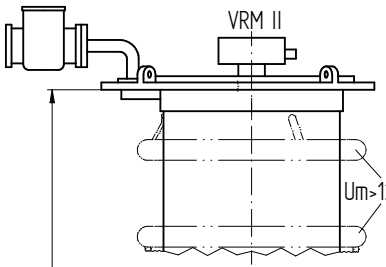

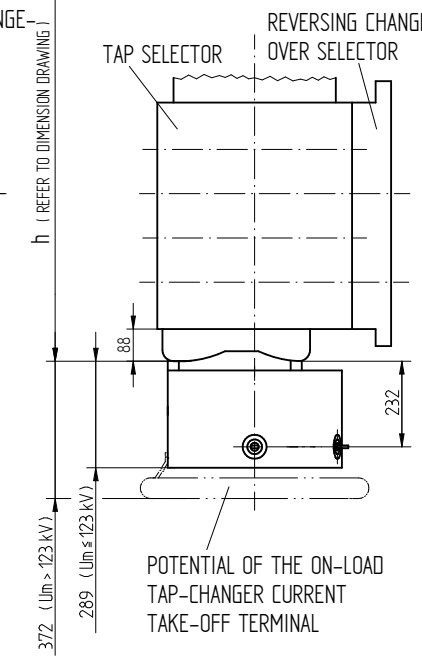

DESIGN:
M III Y
RM III Y
VM III Y
VRC III Y
VRE III Y
VRS III Y
VRM III Y

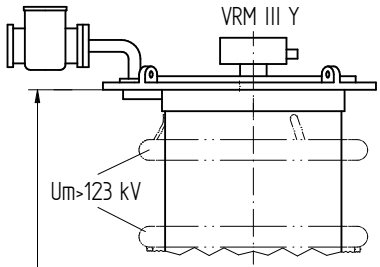

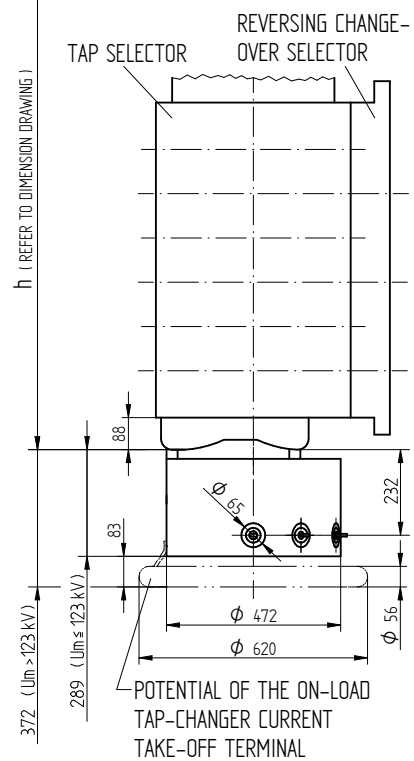

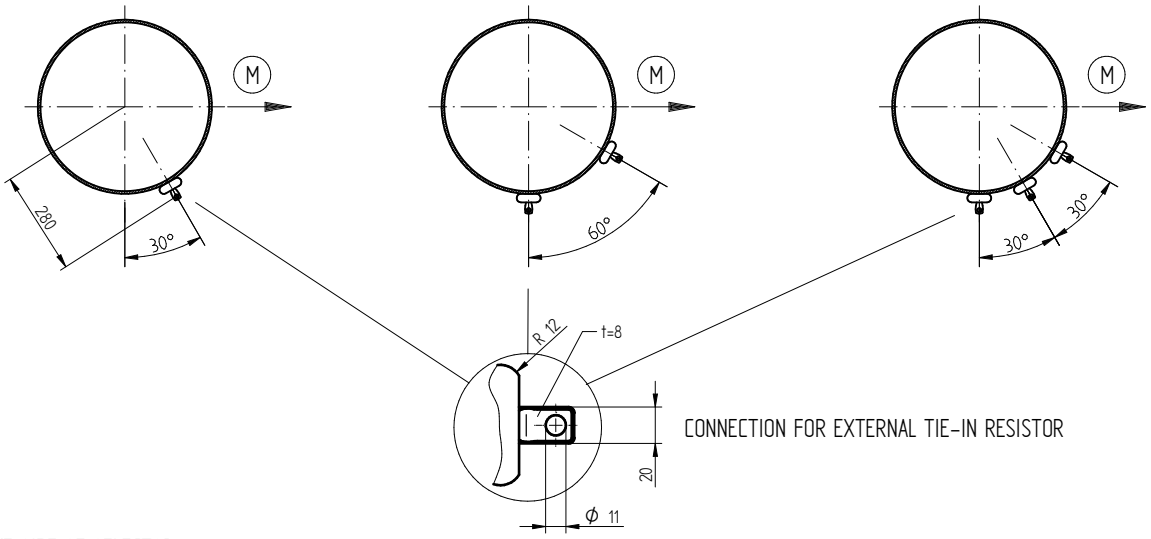

(M) DRIVE SIDE OF SELECTOR

CONNECTING FROM TIE-IN SWITCH TO ON-LOAD TAP-CHANGER CURRENT TAKE-OFF TERMINAL IS CARRIED OUT BY MR
THE DETAILED CONNECTION DIAGRAM IS BINDING FOR THE DESIGNATION OF THE CONNECTION CONTACTS AND PHASES

NOT APPLICABLE TO VM I 301 , VM II 302 AND VM III 300 Y

	DATE	NAME	DOCUMENT NO.	
DFTR.	18.10.2016	CTETPRAKTIK2	SED 1050468 001 07	
CHKD.	19.10.2016	HILTNER	CHANGE NO.	SCALE
STAND.	20.10.2016	PRODASTSCHUK	1077668	1:10

DIMENSION IN mm EXCEPT AS NOTED

MR

ON-LOAD TAP-CHANGER OILTAP®M, RM / VACUTAP® VM, VR
M/RM/VM/VRC/VRE/VRS/VRM - REVERSING CANGE-OVER SEL. - SIZE B/C/D/DE
POTENTIAL CONNECTION UNIT WITH TIE-IN SWITCH WITHOUT TIE-IN RESISTORS

SERIAL NUMBER

MATERIAL NUMBER 8988046E

SHEET 1/1

A2

© MASCHINENFABRIK REINHAUSEN GMBH 2016
THE REPRODUCTION, DISTRIBUTION AND UTILIZATION OF THIS DOCUMENT AS WELL AS THE COMMUNICATION OF ITS CONTENTS TO OTHERS WITHOUT EXPRESS AUTHORIZATION IS PROHIBITED. OFFENDERS WILL BE HELD LIABLE FOR THE PAYMENT OF DAMAGES. ALL RIGHTS RESERVED IN THE EVENT OF THE GRANT OF A PATENT, UTILITY MODEL OR DESIGN.

DESIGN I
POTENTIAL CONNECTION UNIT $U_m \leq 123$ kV

DESIGN II
POTENTIAL CONNECTION UNIT $U_m > 123$ kV

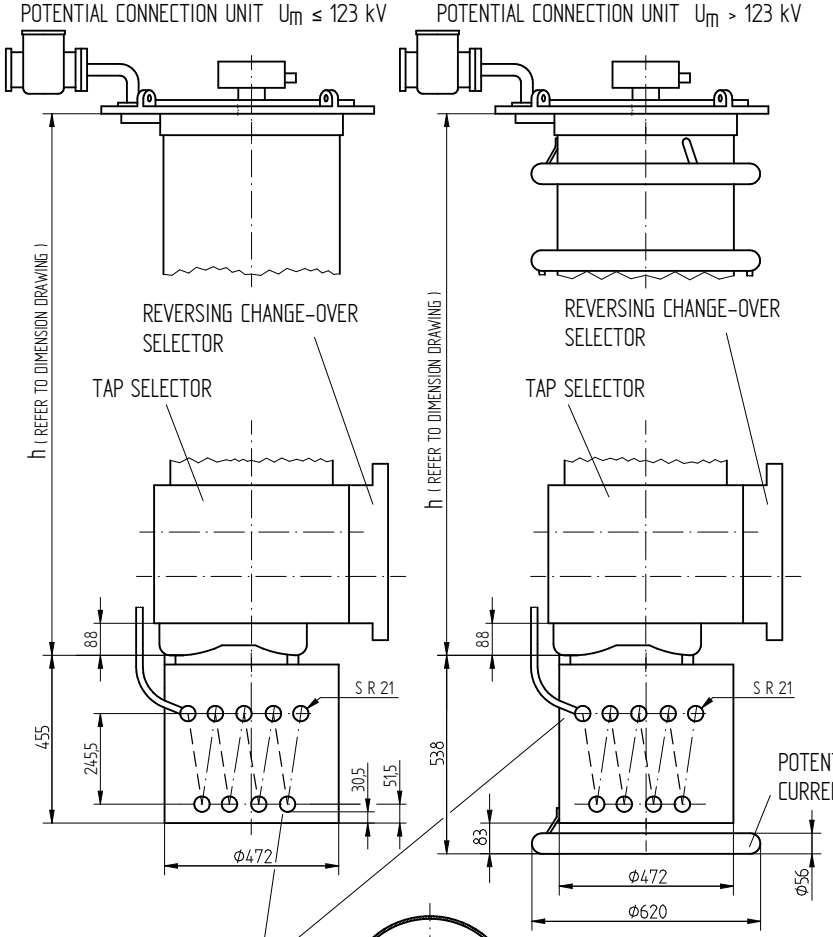

POTENTIAL OF THE ON-LOAD TAP-CHANGER CURRENT TAKE-OFF TERMINAL

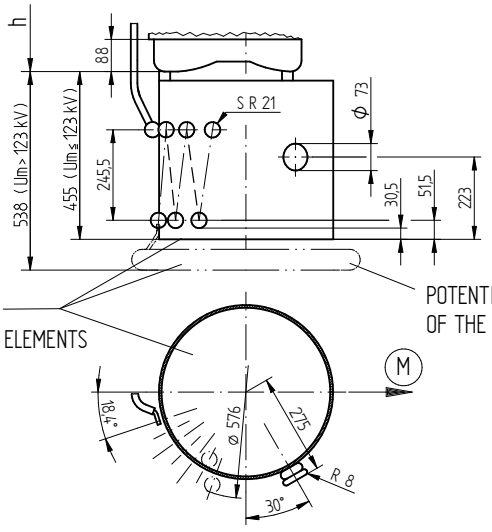

ARRANGEMENT OF LEADS
TIE-IN RESISTOR – SELECTOR
FOR CONTACT LOCATION REFER TO RELEVANT DIMENSION DRAWING

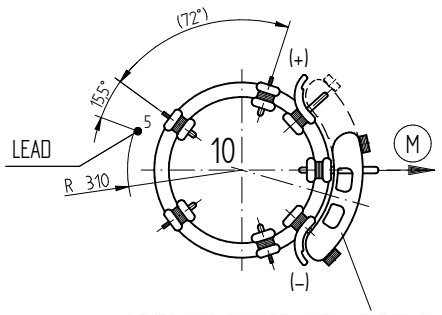

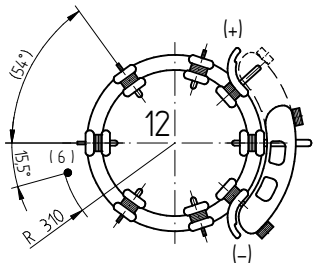

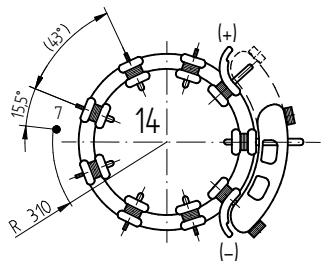

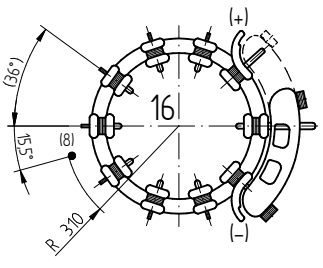

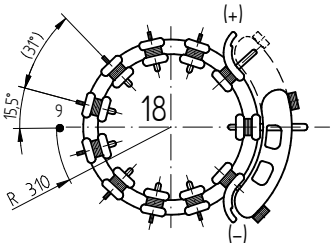

(M) DRIVE SIDE OF SELECTOR

THE DETAILED CONNECTION DIAGRAM IS BINDING FOR THE DESIGNATION OF THE CONNECTION CONTACTS AND PHASES

CONNECTIONS FROM THE TIE-IN RESISTOR TO THE SELECTOR AND TO THE ON-LOAD TAP-CHANGER CURRENT TAKE-OFF TERMINAL ARE CARRIED OUT BY MR

NOT APPLICABLE TO VM I 301

	DATE	NAME	DOCUMENT NO.	
DFTR.	18.10.2016	CTETPRAKTIK2	SED 1665234 000 05	
CHKD.	19.10.2016	HILTNER	CHANGE NO.	SCALE
STAND.	20.10.2016	PRODASTSCHUK	1077668	1:10

DIMENSION IN mm EXCEPT AS NOTED

MR

ON-LOAD TAP-CHANGER OILTAP®M, RM / VACUTAP® VM, VR
M/RM/VM/VRC/VRE/VRS/VRM I – REVERS. CANGE-OVER SEL. – SIZE B/C/D/DE
TIE-IN RESISTORS WITH/WITHOUT TIE-IN SWITCH

SERIAL NUMBER

MATERIAL NUMBER 8986905E

SHEET 1/1

A2

© MASCHINENFABRIK REINHAUSEN GMBH 2016
THE REPRODUCTION, DISTRIBUTION AND UTILIZATION OF THIS DOCUMENT AS WELL AS THE COMMUNICATION OF ITS CONTENTS TO OTHERS WITHOUT EXPRESS AUTHORIZATION IS PROHIBITED. OFFENDERS WILL BE HELD LIABLE FOR THE PAYMENT OF DAMAGES. ALL RIGHTS RESERVED IN THE EVENT OF THE GRANT OF A PATENT, UTILITY MODEL OR DESIGN.

DESIGN I
POTENTIAL CONNECTION UNIT $U_m \leq 123$ kV

DESIGN II
POTENTIAL CONNECTION UNIT $U_m > 123$ kV

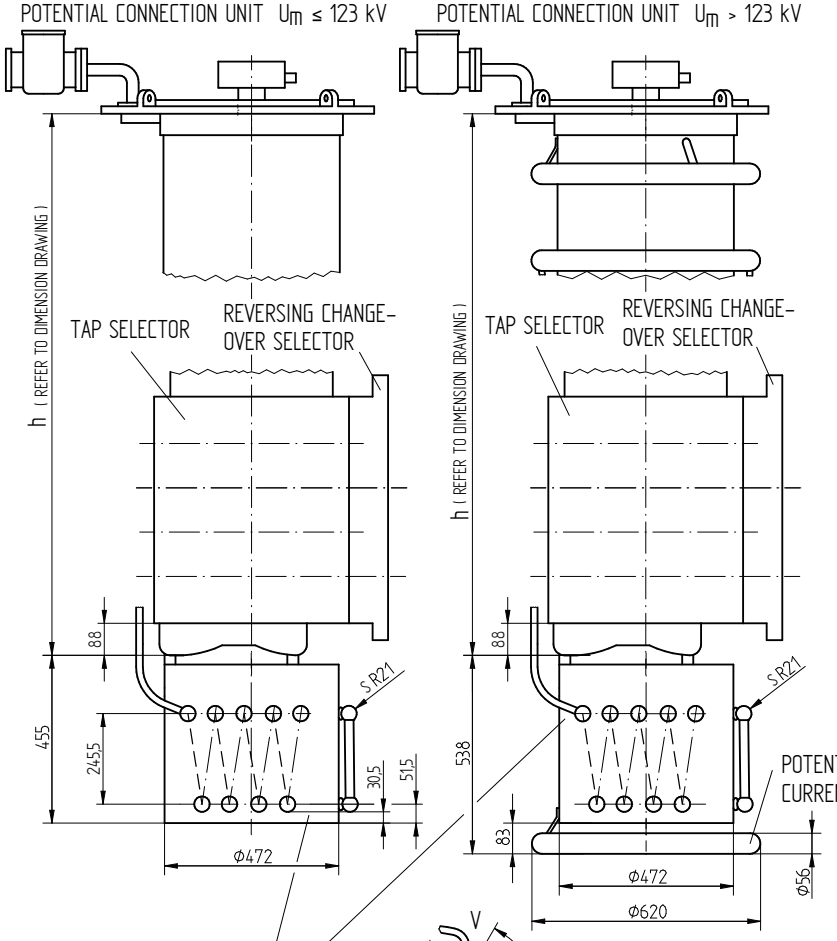

ARRANGEMENT OF LEADS
TIE-IN RESISTOR – PHASE
FOR CONTACT LOCATION REFER TO RELEVANT DIMENSION DRAWING

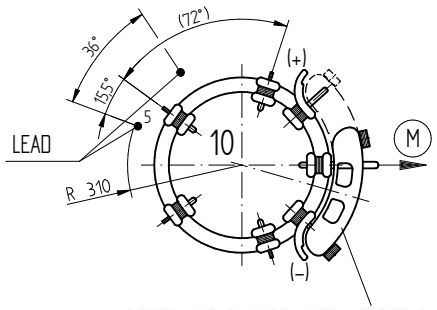

REVERSING CHANGE-OVER SELECTOR

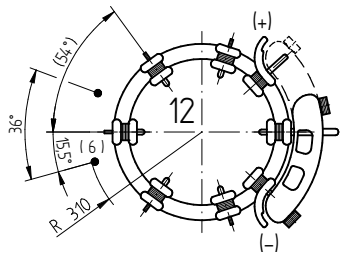

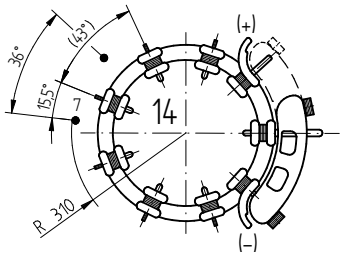

WITHOUT TIE-IN SWITCH
FOR MAX. 8 RESISTOR ELEMENTS PER PHASE
(AS SHOWN)

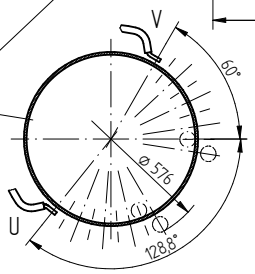

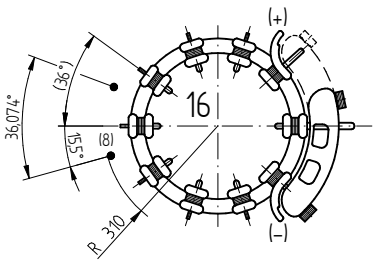

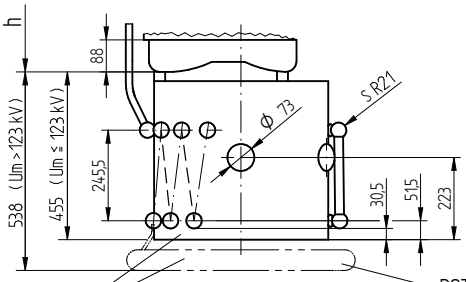

WITH TIE-IN SWITCH
FOR MAX. 6 RESISTOR ELEMENTS PER PHASE
(AS SHOWN)

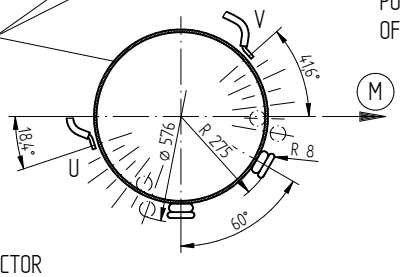

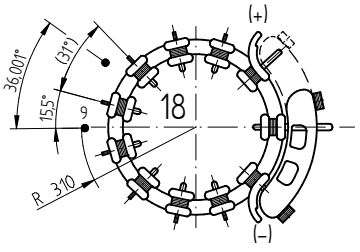

(M) DRIVE SIDE OF SELECTOR

THE DETAILED CONNECTION DIAGRAM IS BINDING FOR THE DESIGNATION OF THE CONNECTION CONTACTS AND PHASES

CONNECTIONS FROM THE TIE-IN RESISTOR TO THE SELECTOR AND TO THE ON-LOAD TAP-CHANGER CURRENT TAKE-OFF TERMINAL ARE CARRIED OUT BY MR

NOT APPLICABLE TO VM II 302

	DATE	NAME	DOCUMENT NO.	
DFTR.	20.10.2016	CTETPRAKTIK2	SED 1665189 000 05	
CHKD.	20.10.2016	HILTNER	CHANGE NO.	SCALE
STAND.	20.10.2016	PRODASTSCHUK	1077668	1:10

DIMENSION IN mm EXCEPT AS NOTED

MR

ON-LOAD TAP-CHANGER OILTAP®M, RM / VACUTAP® VM, VR
M/RM/VM/VRC/VRE/VRS/VRM II- REVERS. CANGE-OVER SEL.- SIZE B/C/D/DE
TIE-IN RESISTORS WITH/WITHOUT TIE-IN SWITCH

SERIAL NUMBER

MATERIAL NUMBER 8986915E

SHEET 1/1

A2

© MASCHINENFABRIK REINHAUSEN GMBH 2018
THE REPRODUCTION, DISTRIBUTION AND UTILIZATION OF THIS DOCUMENT AS WELL AS THE COMMUNICATION OF ITS CONTENTS TO OTHERS WITHOUT EXPRESS AUTHORIZATION IS PROHIBITED. OFFENDERS WILL BE HELD LIABLE FOR THE PAYMENT OF DAMAGES. ALL RIGHTS RESERVED IN THE EVENT OF THE GRANT OF A PATENT, UTILITY MODEL OR DESIGN.

DESIGN I
POTENTIAL CONNECTION UNIT $U_m \leq 123$ kV

DESIGN II
POTENTIAL CONNECTION UNIT $U_m > 123$ kV

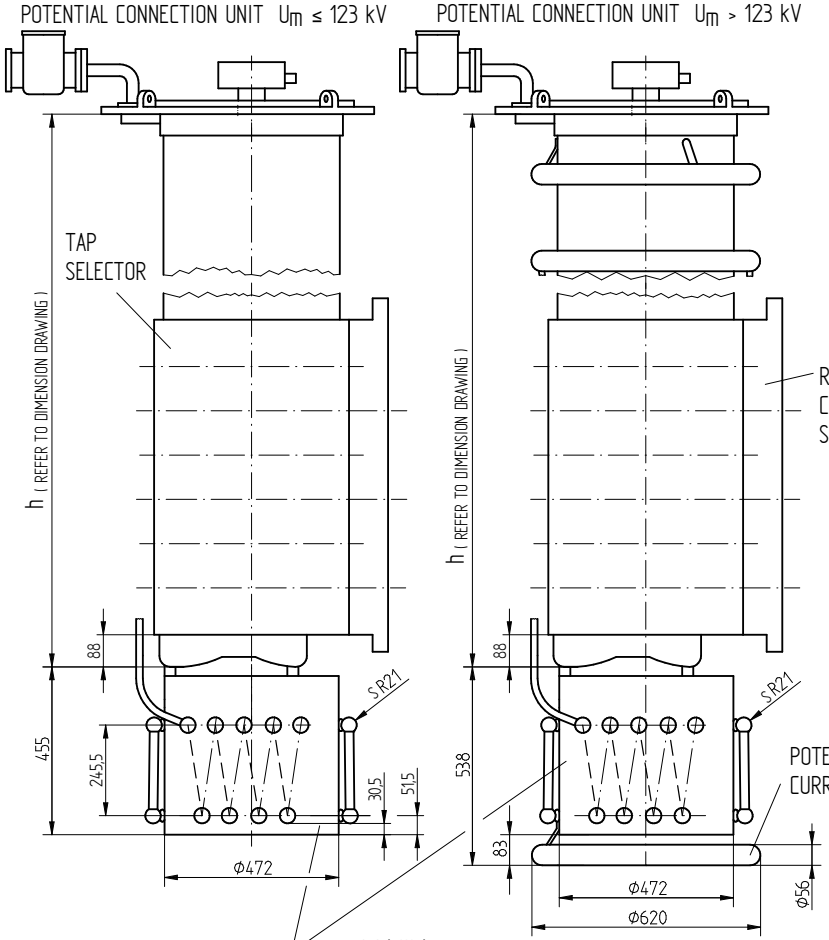

ARRANGEMENT OF LEADS
TIE-IN RESISTOR – PHASE
FOR CONTACT LOCATION REFER TO RELEVANT DIMENSION DRAWING

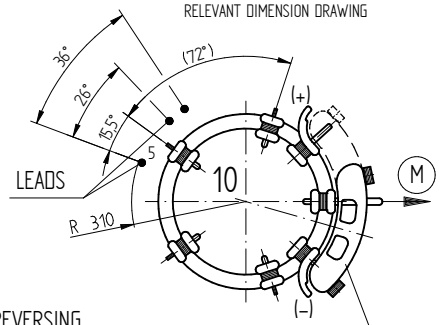

REVERSING CHANGE-OVER SELECTOR

WITHOUT TIE-IN SWITCH
FOR MAX. 8 RESISTOR ELEMENTS PER PHASE
(AS SHOWN)

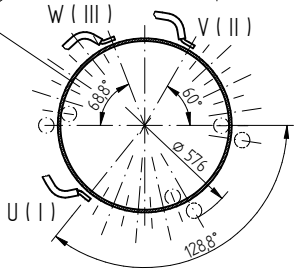

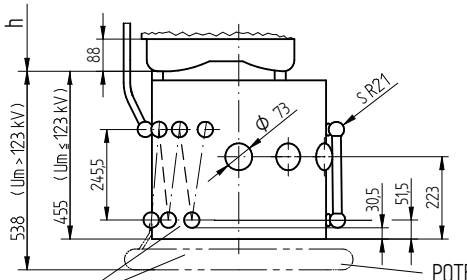

POTENTIAL OF THE MIDDLE OF THE TAP WINDING

WITH TIE-IN SWITCH
FOR MAX. 6 RESISTOR ELEMENTS PER PHASE
(AS SHOWN)

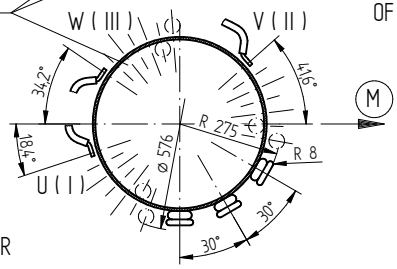

(M) DRIVE SIDE OF SELECTOR

THE DETAILED CONNECTION DIAGRAM IS BINDING FOR THE DESIGNATION OF THE CONNECTION CONTACTS AND PHASES

CONNECTIONS FROM THE TIE-IN RESISTOR TO THE SELECTOR AND TO THE ON-LOAD TAP-CHANGER CURRENT TAKE-OFF TERMINAL ARE CARRIED OUT BY MR

NOT APPLICABLE TO VMS III 400 Y – B

	DATE	NAME	DOCUMENT NO.	
DFTR.	12.07.2018	BUTERUS	SED 1665139 000 06	
CHKD.	16.07.2018	WILHELM	CHANGE NO.	SCALE
STAND.	16.07.2018	PRODASTSCHUK	1086956	1:10

DIMENSION IN mm EXCEPT AS NOTED

OLTC OILTAP® M, RM / VACUTAP® VM®, VMS®-C, VR®
M/RM/VM/VMS/VRC/VRE/VRS/VRM III Y – REV. COS – M-SEL. SIZE B/C/D/DE
TIE-IN RESISTORS WITH / WITHOUT TIE-IN SWITCH

SERIAL NUMBER

MATERIAL NUMBER 8986926E

SHEET 1/1

A2

© MASCHINENFABRIK REINHAUSEN GMBH 2016
THE REPRODUCTION, DISTRIBUTION AND UTILIZATION OF THIS DOCUMENT AS WELL AS THE COMMUNICATION OF ITS CONTENTS TO OTHERS WITHOUT EXPRESS AUTHORIZATION IS PROHIBITED. OFFENDERS WILL BE HELD LIABLE FOR THE PAYMENT OF DAMAGES. ALL RIGHTS RESERVED IN THE EVENT OF THE GRANT OF A PATENT, UTILITY MODEL OR DESIGN.

DESIGN I
POTENTIAL CONNECTION UNIT $U_m \leq 123$ kV

DESIGN II
POTENTIAL CONNECTION UNIT $U_m > 123$ kV

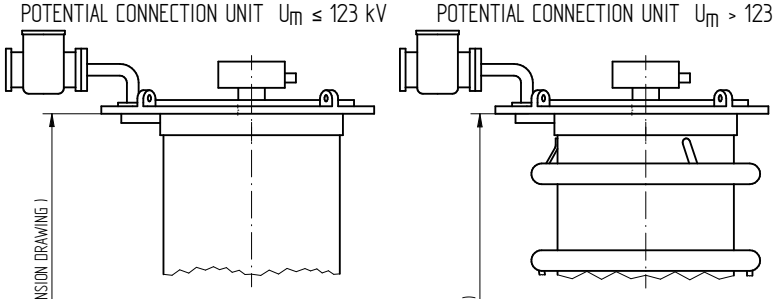

ARRANGEMENT OF LEADS
TIE-IN RESISTOR – SELECTOR
FOR CONTACT LOCATION REFER TO RELEVANT DIMENSION DRAWING

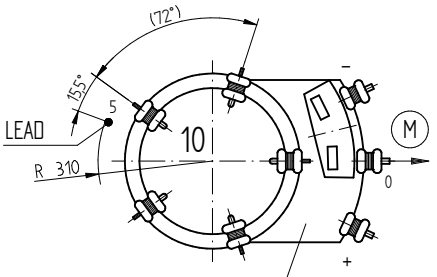

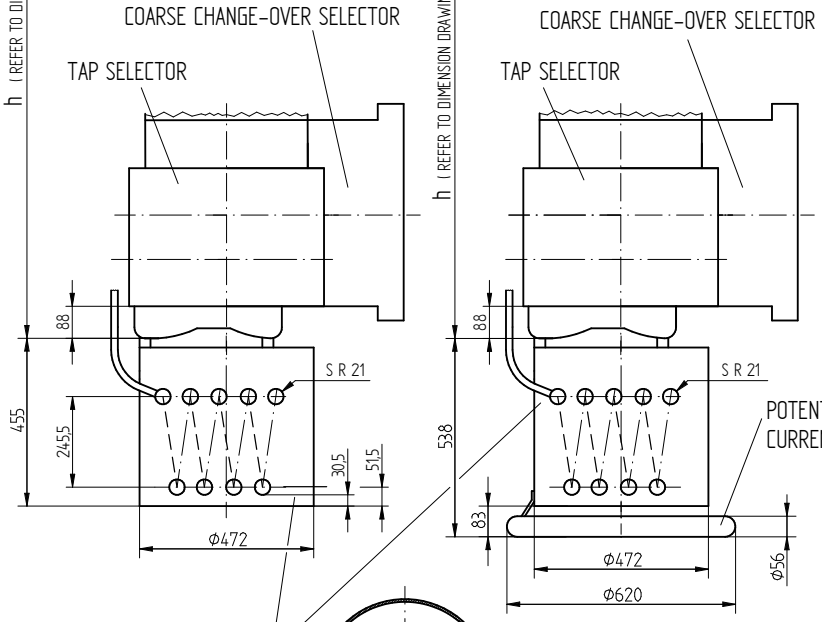

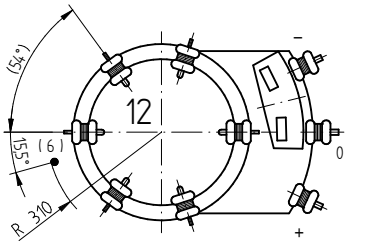

POTENTIAL OF THE ON-LOAD TAP-CHANGER CURRENT TAKE-OFF TERMINAL

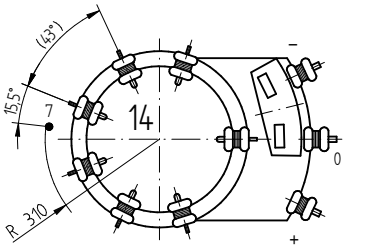

WITHOUT TIE-IN SWITCH
FOR MAX. 8 RESISTOR ELEMENTS
(AS SHOWN)

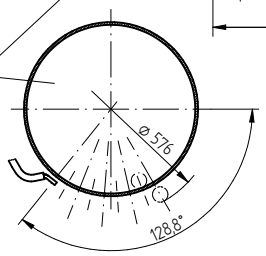

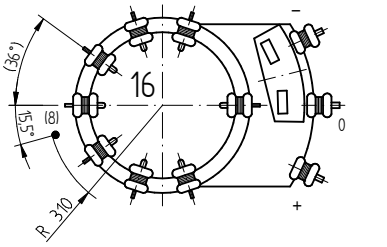

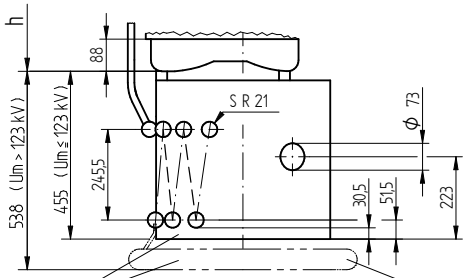

WITH TIE-IN SWITCH
FOR MAX. 6 RESISTOR ELEMENTS
(AS SHOWN)

POTENTIAL OF THE MIDDLE OF THE TAP WINDING

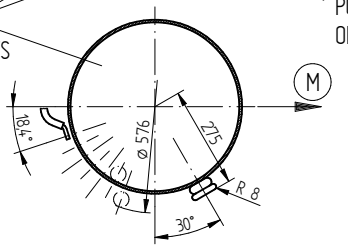

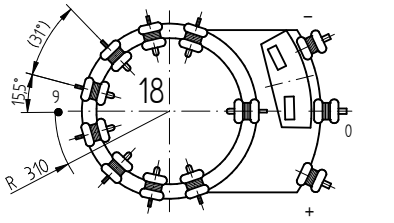

(M) DRIVE SIDE OF SELECTOR

THE DETAILED CONNECTION DIAGRAM IS BINDING FOR THE DESIGNATION OF THE CONNECTION CONTACTS AND PHASES
CONNECTIONS FROM THE TIE-IN RESISTOR TO THE SELECTOR AND TO THE ON-LOAD TAP-CHANGER CURRENT TAKE-OFF TERMINAL ARE CARRIED OUT BY MR

NOT APPLICABLE TO VM I 301

	DATE	NAME	DOCUMENT NO.
DFTR.	18.10.2016	CTETPRAKTIK2	SED 3378775 000 03
CHKD.	19.10.2016	HILTNER	CHANGE NO. / SCALE
STAND.	20.10.2016	PRODASTSCHUK	1077668 / 1:10

DIMENSION IN mm EXCEPT AS NOTED

MR

ON-LOAD TAP-CHANGER OILTAP®M, RM / VACUTAP® VM, VR
M/RM/VM/VRC/VRE/VRS/VRM I-COARSE CHANGE-OVER SELEC.-SIZE B/C/D/DE
TIE-IN RESISTORS WITH/WITHOUT TIE-IN SWITCH

SERIAL NUMBER

MATERIAL NUMBER 7882662E

SHEET 1/1

A2

© MASCHINENFABRIK REINHAUSEN GMBH 2018
THE REPRODUCTION, DISTRIBUTION AND UTILIZATION OF THIS DOCUMENT AS WELL AS THE COMMUNICATION OF ITS CONTENTS TO OTHERS WITHOUT EXPRESS AUTHORIZATION IS PROHIBITED. OFFENDERS WILL BE HELD LIABLE FOR THE PAYMENT OF DAMAGES. ALL RIGHTS RESERVED IN THE EVENT OF THE GRANT OF A PATENT, UTILITY MODEL OR DESIGN.

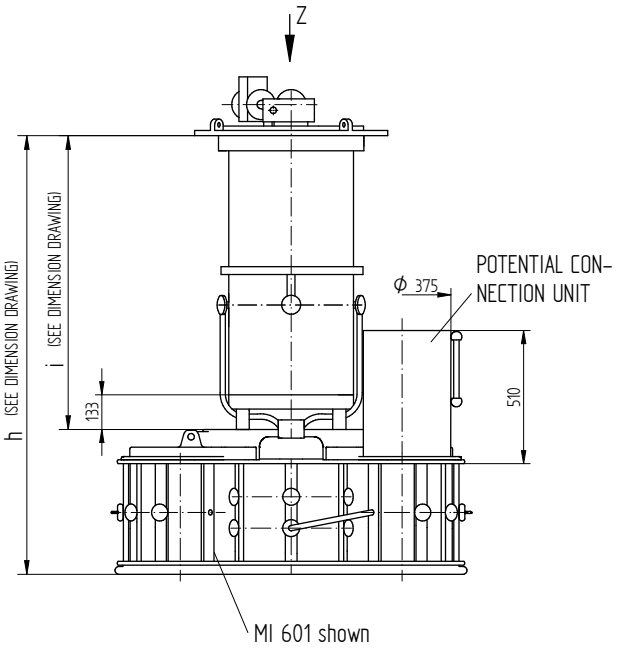

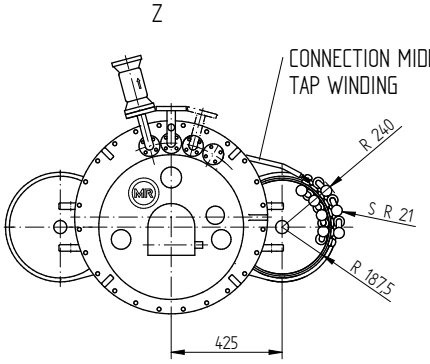

MAX. 7 RESISTOR ELEMENTS
(AS SHOWN)

FOR BINDING DESIGNATIONS OF TERMINALS AND PHASES REFER TO THE CONNECTION DIAGRAM OF THE ON-LOAD TAP-CHANGER.

Ⓜ DRIVE SIDE OF SELECTOR

ARRANGEMENT OF SELECTOR CONTACTS,
2-5 COARSE TAP CONNECTIONS
(PLAN VIEW)

x) FOR 3 COARSE TAP CONNECTIONS
x) AND y) FOR 4 COARSE TAP CONNECTIONS
x), y) AND z) FOR 5 COARSE TAP CONNECTIONS

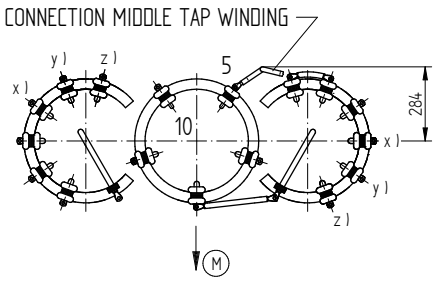

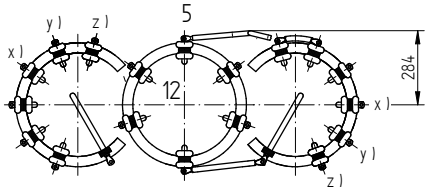

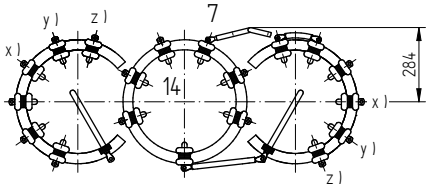

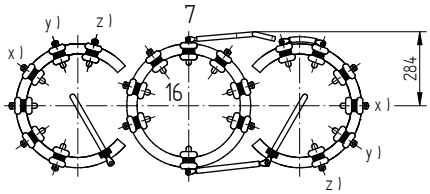

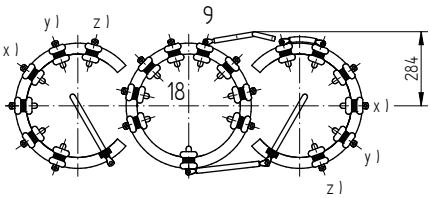

	DATE	NAME	DOCUMENT NO.	
DFTR.	19.04.2018	RAEDLINGER	SED 1062821 000 07	
CHKD.	25.04.2018	HAUER	CHANGE NO.	SCALE
STAND.	25.04.2018	PRODASTSCHUK	1087395	1:10

DIMENSION IN mm EXCEPT AS NOTED

ON-LOAD TAP-CHANGER OILTAP® M I AND VACUTAP® VM I, VRC I, VRS I, VRM I
WITH MULTIPLE COARSE CHANGE-OVER SELECTOR
MOUNTING OF TIE-IN RESISTORS – SELECTOR SIZE B/C/D

SERIAL NUMBER

MATERIAL NUMBER 7197337E

SHEET 1/1

4.7 接続図（例）

ここに記載されている接続図は単なる例です。

ご注文に固有の接続図は、出荷品の中に含まれています。

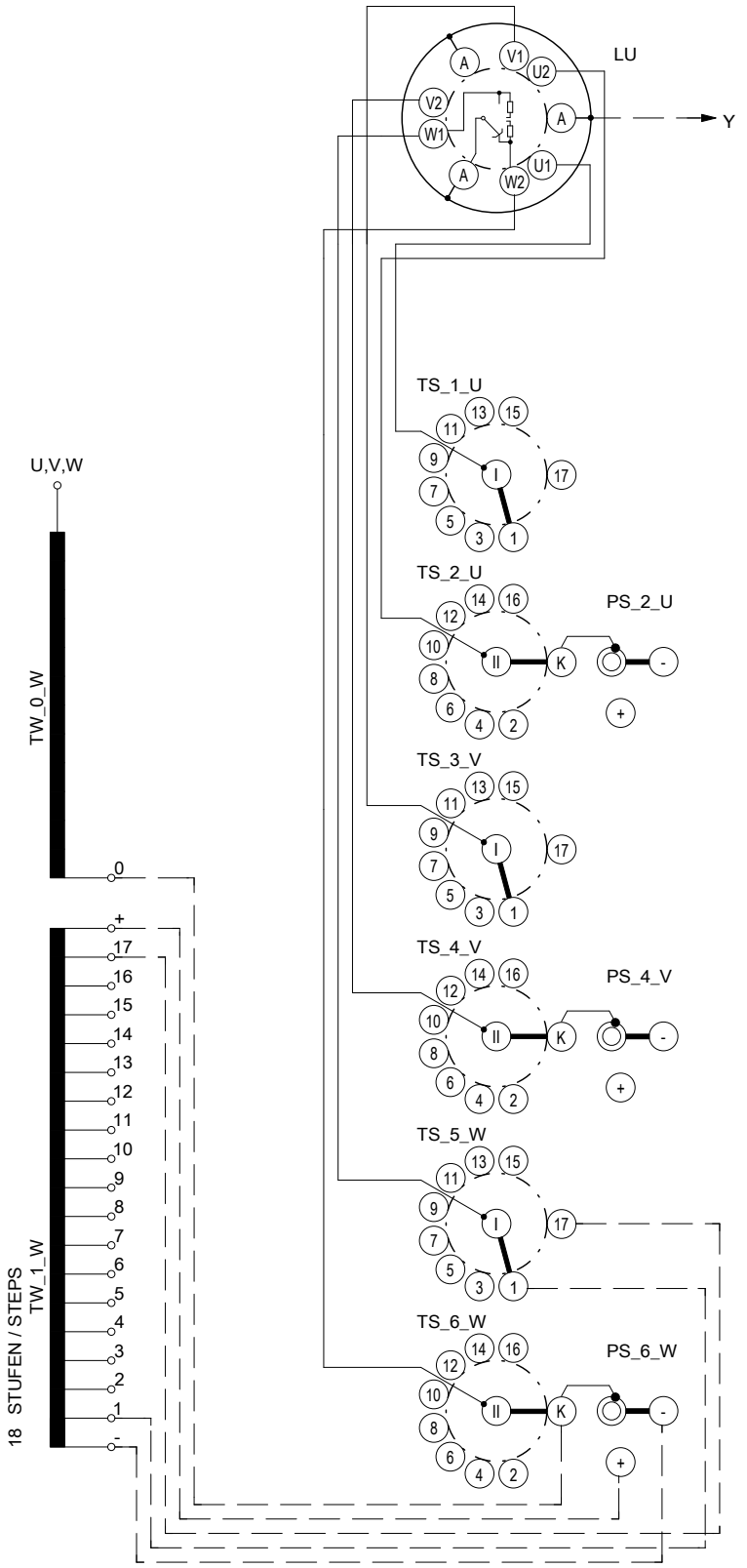

MR VERBINDUNGEN
MR CONNECTIONS

KUNDEN VERBINDUNGEN
CUSTOMER CONNECTIONS

TS_1_U	WÄHLEREBENE_U TAP SELECTOR PLANE_U
TS_2_U	WÄHLEREBENE_U TAP SELECTOR PLANE_U
TS_3_V	WÄHLEREBENE_V TAP SELECTOR PLANE_V
TS_4_V	WÄHLEREBENE_V TAP SELECTOR PLANE_V
TS_5_W	WÄHLEREBENE_W TAP SELECTOR PLANE_W
TS_6_W	WÄHLEREBENE_W TAP SELECTOR PLANE_W
PS_2_U	WENDER_U REVERSING CHANGE-OVER SELECTOR_U
PS_4_V	WENDER_V REVERSING CHANGE-OVER SELECTOR_V
PS_6_W	WENDER_W REVERSING CHANGE-OVER SELECTOR_W
TW_0_W	TRAFOWICKLUNG_W TRANSFORMER WINDING_W
TW_1_W	STUFENWICKLUNG_W TAP WINDING_W
LU	LASTUMSCHALTER DIVERTER SWITCH
Y	STERNPUNKT STAR POINT

MOTORANTRIEB
MOTOR DRIVE UNIT

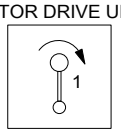

ANTRIEBSSEITE
DRIVE SIDE

35	17	35	
34	16	34	
33	15	33	
32	14	32	
31	13	31	
30	12	30	
29	11	29	
28	10	28	
27	9	27	
26	8	26	
25	7	25	
24	6	24	
23	5	23	
22	4	22	
21	3	21	
20	2	20	
19	1	19	
18	K	18	
17	17	17	
16	16	16	
15	15	15	
14	14	14	
13	13	13	
12	12	12	
11	11	11	
10	10	10	
9	9	9	
8	8	8	
7	7	7	
6	6	6	
5	5	5	
4	4	4	
3	3	3	
2	2	2	
1	1	1	

K -

K +

STELLUNG DES WENDERS
POSITION OF REVERSING CHANGE-OVER SELECTOR

BETRIEBSSTELLUNG
SERVICE POSITION

BEZEICHNUNG DER WÄHLERKONTAKTE
DESIGNATION OF TAP SELECTOR CONTACTS

BEZEICHNUNG DER STELLUNGEN
DESIGNATION OF POSITIONS

REGELBEREICH (kV)
REGULATION RANGE (kV)

BETRIEBSSTELLUNGEN SERVICE POSITIONS	35
VERSCHIEDENE SPANNUNGEN DIFFERENT VOLTAGES	35
JUSTIERSTELLUNG ADJUSTMENT POSITION	18

LASTSTUFENSCHALTER
ON-LOAD TAP-CHANGER

VACUTAP® VRS III 1300Y-123/RD-18 35 1W

NO.	MODIFICATION	DATE	NAME

MR

ORIGIN. | REPL. | REPL.BY

DATE	01.08.2017
EXEC.	KONFIG
VERIFIED	CSO
STANDARD	

SCHALTBILD
CONNECTION DIAGRAM

LANGUAGE: DE EN

PROJECT: 5140296_01

SHEET 1 / 1 SH.

Fuer diese technische Unterlage behalten wir uns gemaess DIN 34 Abschnitt 2.1 und 2.2 alle Rechte vor.
DRAWING BY CAD DO NOT MODIFY MANUALLY

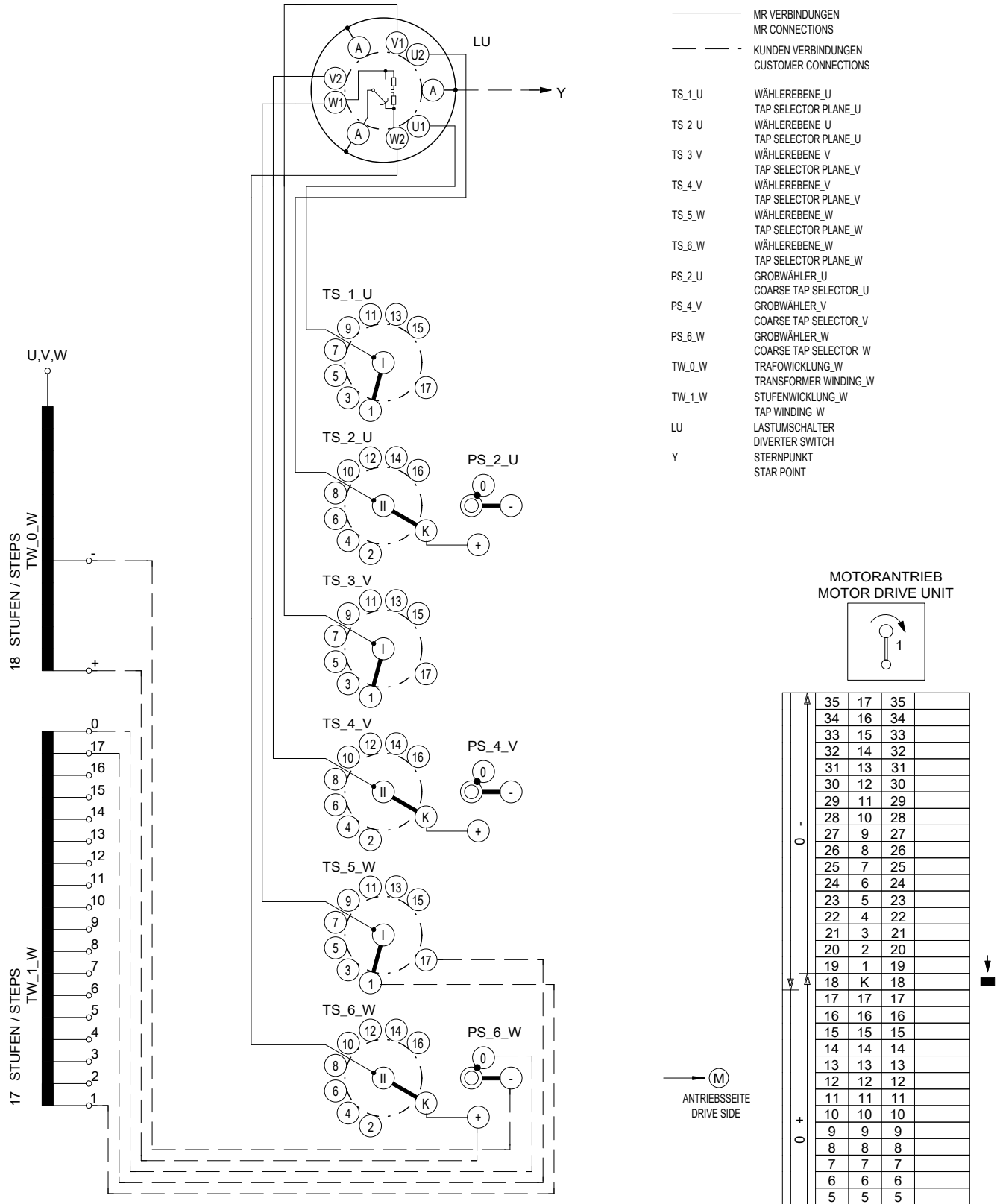

35	17	35	
34	16	34	
33	15	33	
32	14	32	
31	13	31	
30	12	30	
29	11	29	
28	10	28	
27	9	27	
26	8	26	
25	7	25	
24	6	24	
23	5	23	
22	4	22	
21	3	21	
20	2	20	
19	1	19	
18	K	18	
17	17	17	
16	16	16	
15	15	15	
14	14	14	
13	13	13	
12	12	12	
11	11	11	
10	10	10	
9	9	9	
8	8	8	
7	7	7	
6	6	6	
5	5	5	
4	4	4	
3	3	3	
2	2	2	
1	1	1	

BETRIEBSSTELLUNGEN SERVICE POSITIONS	35
VERSCHIEDENE SPANNUNGEN DIFFERENT VOLTAGES	35
JUSTIERSTELLUNG ADJUSTMENT POSITION ■	18

STELLUNG DES GROBWÄHLERS POSITION OF COARSE TAP SELECTOR
BETRIEBSSTELLUNG SERVICE POSITION
BEZEICHNUNG DER WÄHLERKONTAKTE DESIGNATION OF TAP SELECTOR CONTACTS
BEZEICHNUNG DER STELLUNGEN DESIGNATION OF POSITIONS
REGELBEREICH (kV) REGULATION RANGE (kV)

Fuer diese technische Unterlage behalten wir uns gemaess DIN 34 Abschnitt 2.1 und 2.2 alle Rechte vor.

DRAWING BY CAD DO NOT MODIFY MANUALLY

NO. | MODIFICATION | DATE | NAME

LASTSTUFENSCHALTER
ON-LOAD TAP-CHANGER

VACUTAP® VRS III 1300Y-123/RD-18 35 1G

ORIGIN. | REPL. | REPL.BY

DATE 01.08.2017
EXEC. KONFIG
VERIFIED CSO
STANDARD

SCHALTBILD
CONNECTION DIAGRAM

LANGUAGE: DE EN

PROJECT: 5140298_01

SHEET 1
1 SH.

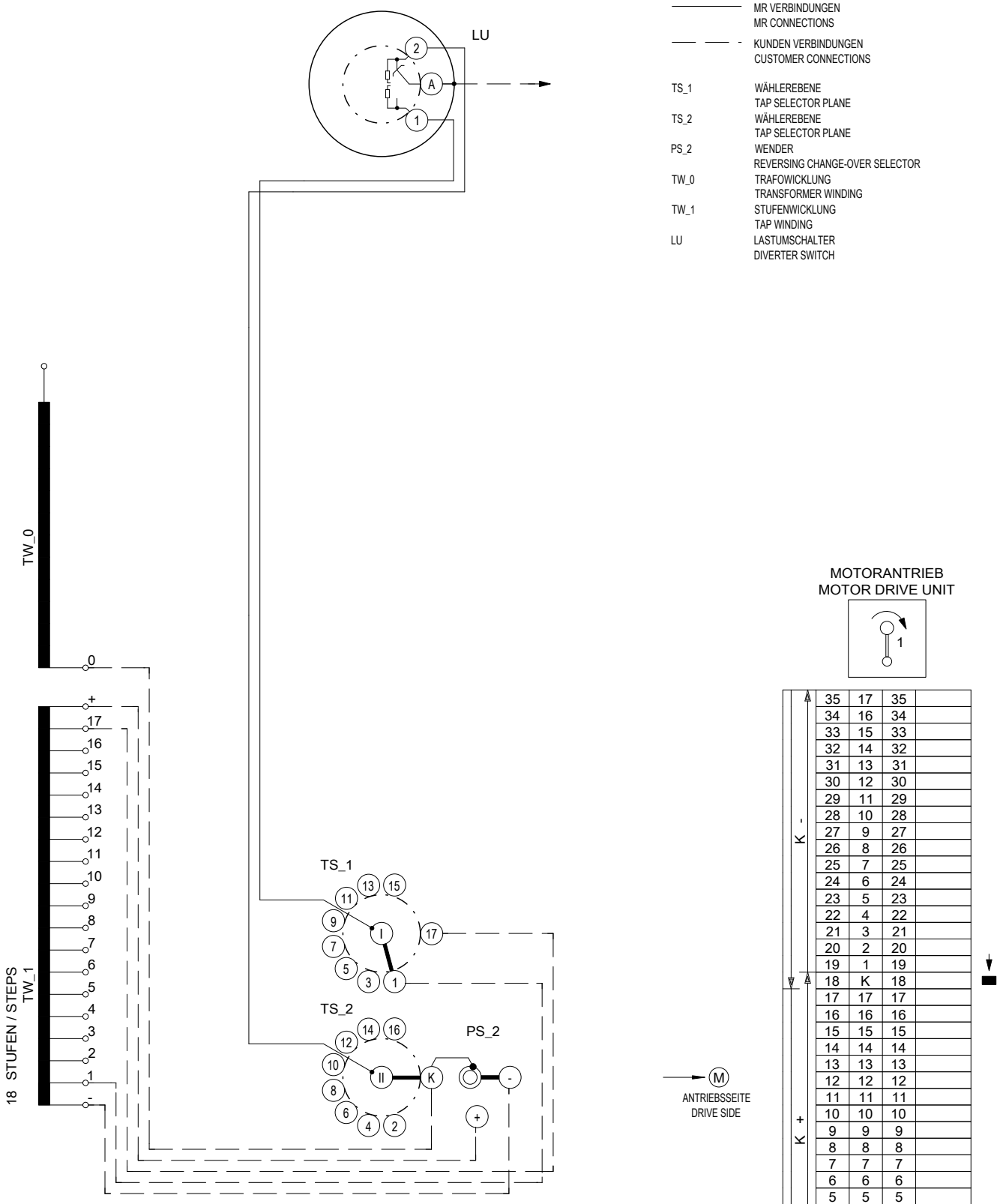

BETRIEBSSTELLUNGEN SERVICE POSITIONS	35
VERSCHIEDENE SPANNUNGEN DIFFERENT VOLTAGES	35
JUSTIERSTELLUNG ADJUSTMENT POSITION ■	18

STELLUNG DES WENDERS POSITION OF REVERSING CHANGE-OVER SELECTOR
BETRIEBSSTELLUNG SERVICE POSITION
BEZEICHNUNG DER WÄHLERKONTAKTE DESIGNATION OF TAP SELECTOR CONTACTS
BEZEICHNUNG DER STELLUNGEN DESIGNATION OF POSITIONS
REGELBEREICH (kV) REGULATION RANGE (kV)

Fuer diese technische Unterlage behalten wir uns gemaess DIN 34 Abschnitt 2.1 und 2.2 alle Rechte vor.
DRAWING BY CAD DO NOT MODIFY MANUALLY

NO. | MODIFICATION | DATE | NAME

LASTSTUFENSCHALTER
ON-LOAD TAP-CHANGER

VACUTAP® VRS I 1301-123/RD-18 35 1W

ORIGIN. | REPL. | REPL.BY

DATE 01.08.2017
EXEC. KONFIG
VERIFIED CSO
STANDARD

SCHALTBILD
CONNECTION DIAGRAM

LANGUAGE: DE EN

PROJECT: 5140300_01

SHEET 1
1 SH.

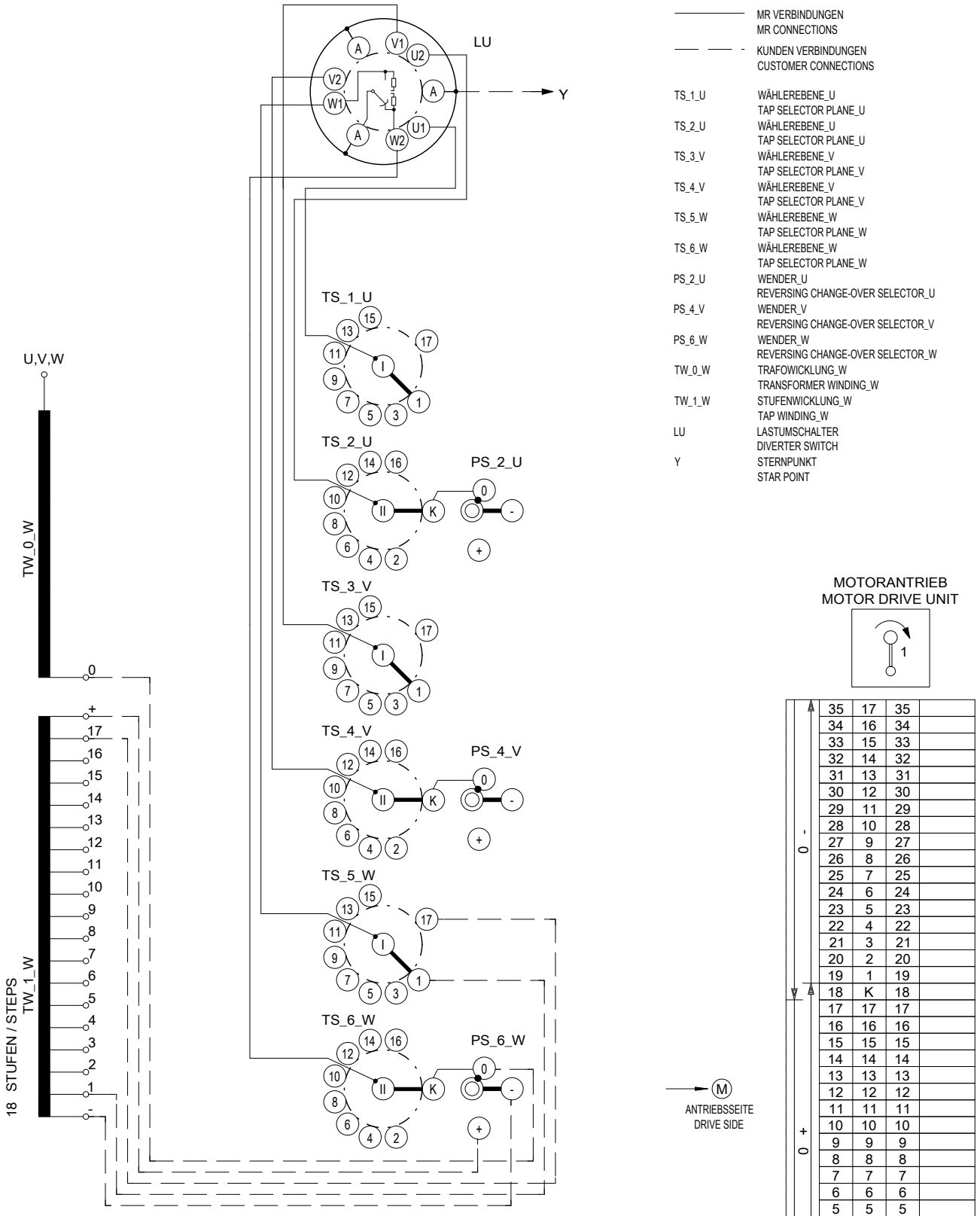

35	17	35	
34	16	34	
33	15	33	
32	14	32	
31	13	31	
30	12	30	
29	11	29	
28	10	28	
27	9	27	
26	8	26	
25	7	25	
24	6	24	
23	5	23	
22	4	22	
21	3	21	
20	2	20	
19	1	19	
18	K	18	
17	17	17	
16	16	16	
15	15	15	
14	14	14	
13	13	13	
12	12	12	
11	11	11	
10	10	10	
9	9	9	
8	8	8	
7	7	7	
6	6	6	
5	5	5	
4	4	4	
3	3	3	
2	2	2	
1	1	1	

0 - / 0 +

STELLUNG DES WENDERS POSITION OF REVERSING CHANGE-OVER SELECTOR	
BETRIEBSSTELLUNG SERVICE POSITION	
BEZEICHNUNG DER WÄHLERKONTAKTE DESIGNATION OF TAP SELECTOR CONTACTS	
BEZEICHNUNG DER STELLUNGEN DESIGNATION OF POSITIONS	
REGELBEREICH (kV) REGULATION RANGE (kV)	

BETRIEBSSTELLUNGEN SERVICE POSITIONS	35
VERSCHIEDENE SPANNUNGEN DIFFERENT VOLTAGES	35
JUSTIERSTELLUNG ■ ADJUSTMENT POSITION	18

Fuer diese technische Unterlage behalten wir uns gemaess DIN 34 Abschnitt 2.1 und 2.2 alle Rechte vor.
DRAWING BY CAD DO NOT MODIFY MANUALLY

NO. | MODIFICATION | DATE | NAME

LASTSTUFENSCHALTER
ON-LOAD TAP-CHANGER

VACUTAP® VRS III 1300Y-123/RE-18 35 1W

ORIGIN.	REPL.	REPL.BY	
DATE	01.08.2017		
EXEC.	KONFIG		
VERIFIED	CSO		
STANDARD			

SCHALTBILD
CONNECTION DIAGRAM

LANGUAGE: DE EN

PROJECT: 5140417_02

SHEET 1
1 SH.

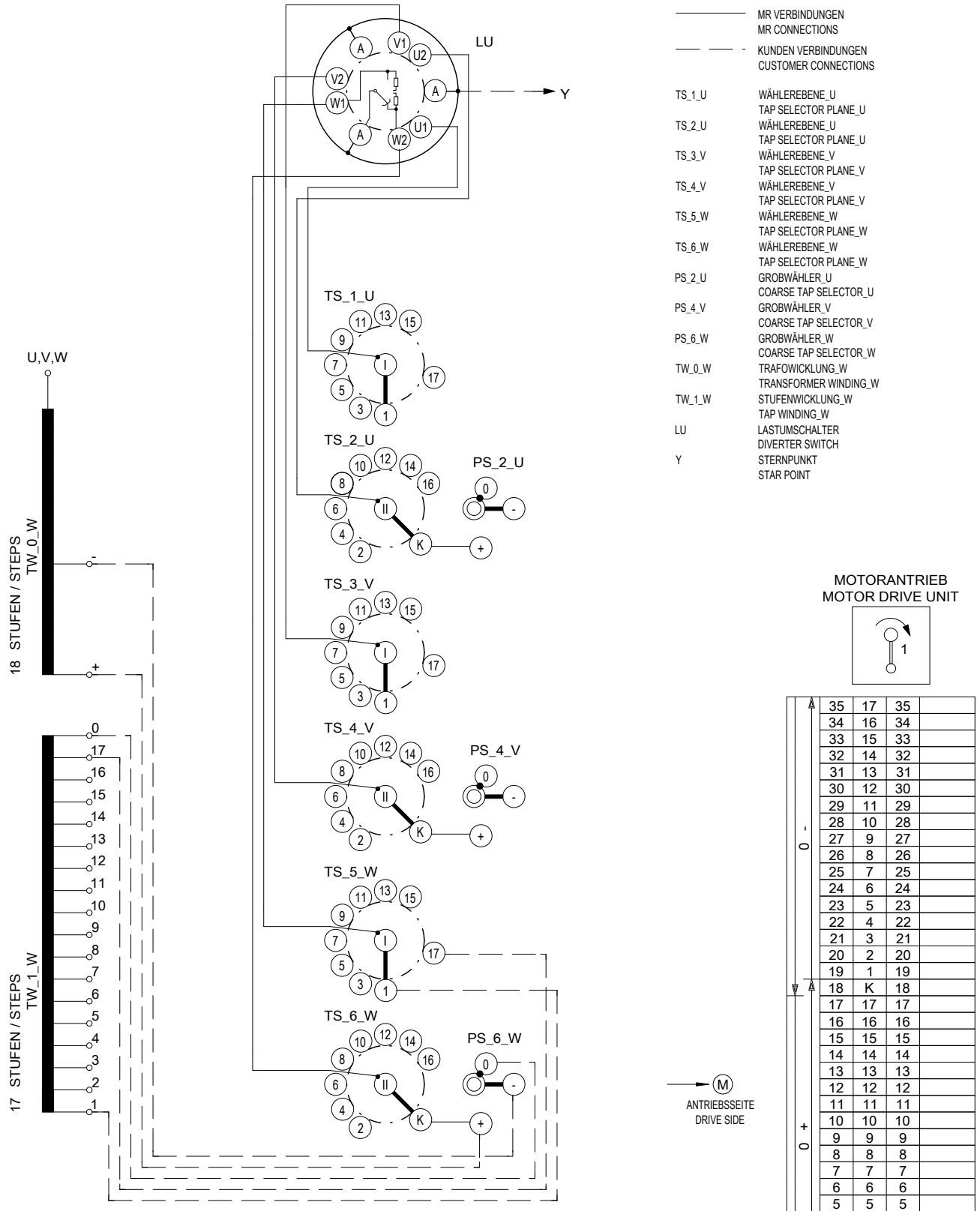

MR VERBINDUNGEN MR CONNECTIONS	
KUNDEN VERBINDUNGEN CUSTOMER CONNECTIONS	
TS_1_U	WÄHLEREBENE_U TAP SELECTOR PLANE_U
TS_2_U	WÄHLEREBENE_U TAP SELECTOR PLANE_U
TS_3_V	WÄHLEREBENE_V TAP SELECTOR PLANE_V
TS_4_V	WÄHLEREBENE_V TAP SELECTOR PLANE_V
TS_5_W	WÄHLEREBENE_W TAP SELECTOR PLANE_W
TS_6_W	WÄHLEREBENE_W TAP SELECTOR PLANE_W
PS_2_U	GROBWÄHLER_U COARSE TAP SELECTOR_U
PS_4_V	GROBWÄHLER_V COARSE TAP SELECTOR_V
PS_6_W	GROBWÄHLER_W COARSE TAP SELECTOR_W
TW_0_W	TRAFOWICKLUNG_W TRANSFORMER WINDING_W
TW_1_W	STUFENWICKLUNG_W TAP WINDING_W
LU	LASTUMSCHALTER DIVERTER SWITCH
Y	STERNPUNKT STAR POINT

STELLUNG DES GROBWÄHLERS POSITION OF COARSE TAP SELECTOR	0 -	0 +
BETRIEBSSTELLUNG SERVICE POSITION	18	
BEZEICHNUNG DER WÄHLERKONTAKTE DESIGNATION OF TAP SELECTOR CONTACTS	K	
BEZEICHNUNG DER STELLUNGEN DESIGNATION OF POSITIONS	1	1
REGELBEREICH (kV) REGULATION RANGE (kV)	35	35

BETRIEBSSTELLUNGEN SERVICE POSITIONS	35
VERSCHIEDENE SPANNUNGEN DIFFERENT VOLTAGES	35
JUSTIERSTELLUNG ■ ADJUSTMENT POSITION	18

Fuer diese technische Unterlage behalten wir uns gemaess DIN 34 Abschnitt 2.1 und 2.2 alle Rechte vor.

DRAWING BY CAD DO NOT MODIFY MANUALLY

NO.	MODIFICATION	DATE	NAME

LASTSTUFENSCHALTER
ON-LOAD TAP-CHANGER

VACUTAP® VRS III 1300Y-123/RE-18 35 1G

ORIGIN:	REPL.	REPL.BY	
DATE	01.08.2017		
EXEC.	KONFIG		
VERIFIED	CSO		
STANDARD			

SCHALTBILD
CONNECTION DIAGRAM

LANGUAGE: DE EN

PROJECT: 5140418_01

SHEET 1
1 SH.

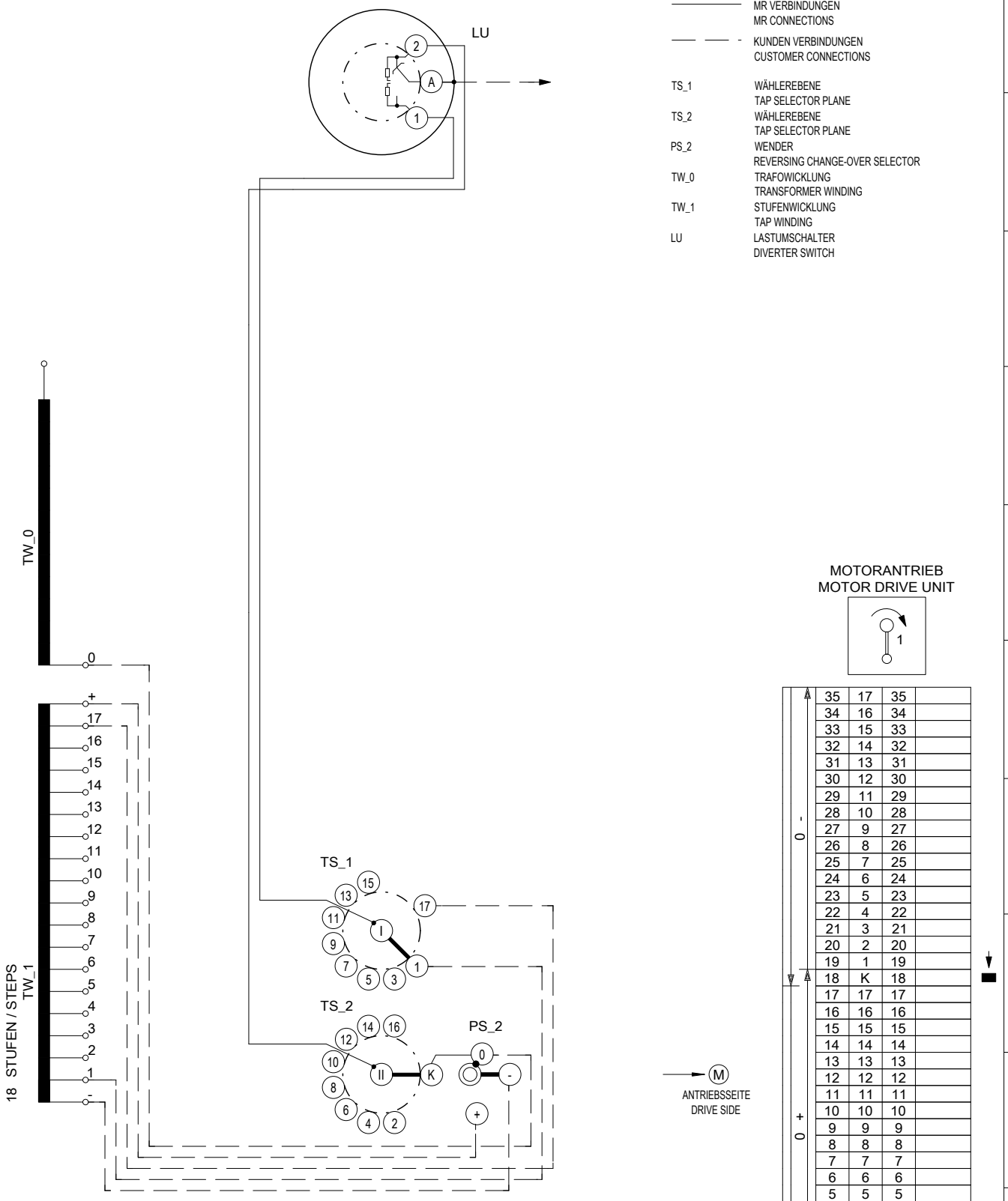

BETRIEBSSTELLUNGEN SERVICE POSITIONS	35
VERSCHIEDENE SPANNUNGEN DIFFERENT VOLTAGES	35
JUSTIERSTELLUNG ADJUSTMENT POSITION ■	18

STELLUNG DES WENDERS POSITION OF REVERSING CHANGE-OVER SELECTOR
BETRIEBSSTELLUNG SERVICE POSITION
BEZEICHNUNG DER WÄHLERKONTAKTE DESIGNATION OF TAP SELECTOR CONTACTS
BEZEICHNUNG DER STELLUNGEN DESIGNATION OF POSITIONS
REGELBEREICH (kV) REGULATION RANGE (kV)

Fuer diese technische Unterlage behalten wir uns gemaess DIN 34 Abschnitt 2.1 und 2.2 alle Rechte vor.
DRAWING BY CAD DO NOT MODIFY MANUALLY

NO. | MODIFICATION | DATE | NAME

LASTSTUFENSCHALTER
ON-LOAD TAP-CHANGER

VACUTAP® VRS I 1301-123/RE-18 35 1W

ORIGIN. | REPL. | REPL.BY

DATE 01.08.2017
EXEC. KONFIG
VERIFIED CSO
STANDARD

SCHALTBILD
CONNECTION DIAGRAM

LANGUAGE: DE EN

PROJECT: 5140419_02

SHEET 1
1 SH.

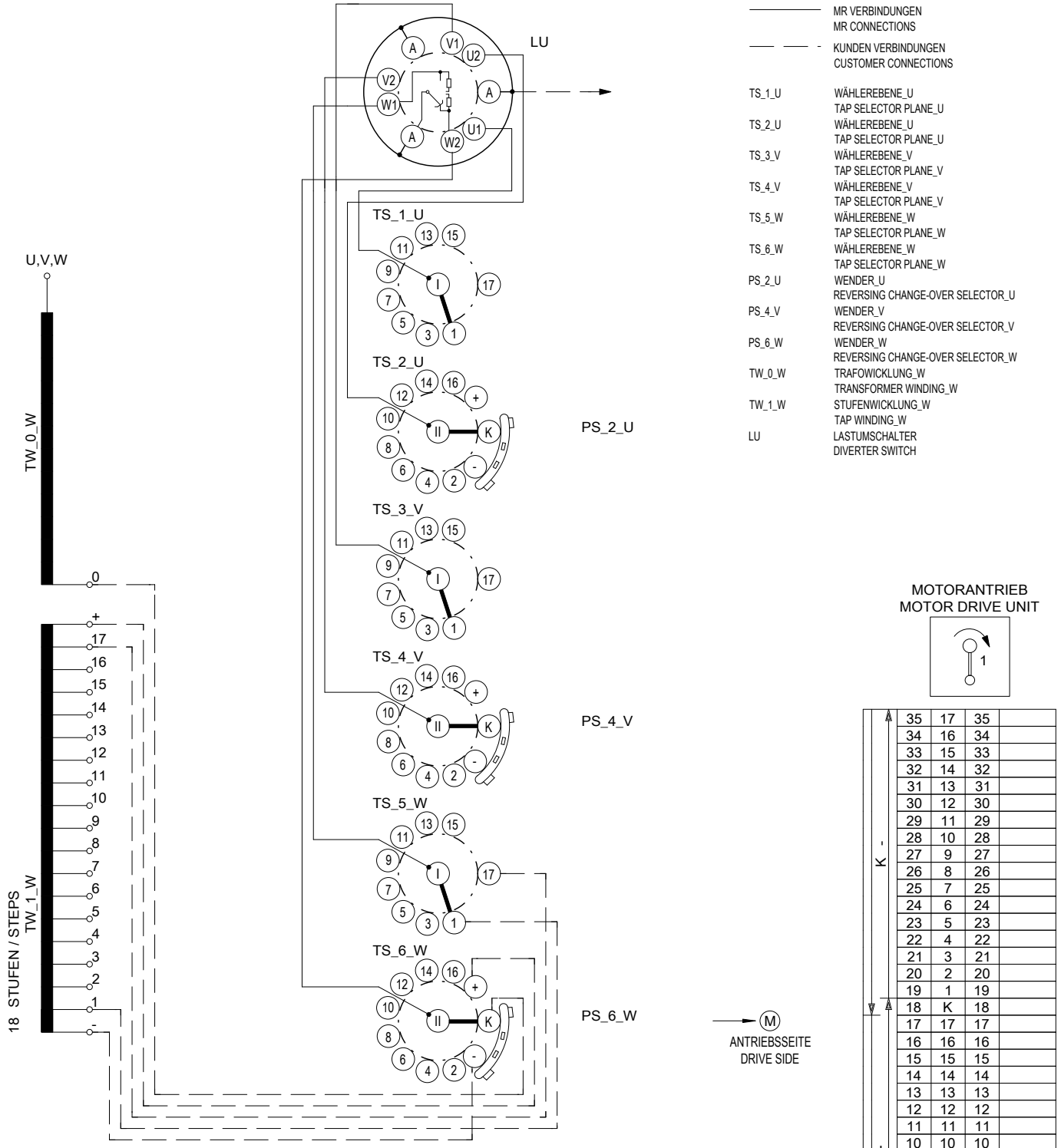

35	17	35	
34	16	34	
33	15	33	
32	14	32	
31	13	31	
30	12	30	
29	11	29	
28	10	28	
27	9	27	
26	8	26	
25	7	25	
24	6	24	
23	5	23	
22	4	22	
21	3	21	
20	2	20	
19	1	19	
18	K	18	
17	17	17	
16	16	16	
15	15	15	
14	14	14	
13	13	13	
12	12	12	
11	11	11	
10	10	10	
9	9	9	
8	8	8	
7	7	7	
6	6	6	
5	5	5	
4	4	4	
3	3	3	
2	2	2	
1	1	1	

BETRIEBSSTELLUNGEN SERVICE POSITIONS	35
VERSCHIEDENE SPANNUNGEN DIFFERENT VOLTAGES	35
JUSTIERSTELLUNG ■ ADJUSTMENT POSITION	18

STELLUNG DES WENDERS POSITION OF REVERSING CHANGE-OVER SELECTOR
BETRIEBSSTELLUNG SERVICE POSITION
BEZEICHNUNG DER WÄHLERKONTAKTE DESIGNATION OF TAP SELECTOR CONTACTS
BEZEICHNUNG DER STELLUNGEN DESIGNATION OF POSITIONS
REGELBEREICH (kV) REGULATION RANGE (kV)

Fuer diese technische Unterlage behalten wir uns gemaess DIN 34 Abschnitt 2.1 und 2.2 alle Rechte vor.

DRAWING BY CAD DO NOT MODIFY MANUALLY

NO. MODIFICATION DATE NAME

LASTSTUFENSCHALTER
ON-LOAD TAP-CHANGER

VACUTAP® VRS III 700Y-123/C-18 35 1W

ORIGIN. REPL. REPL.BY

DATE 02.08.2017
EXEC. KONFIG
VERIFIED CSO
STANDARD

SCHALTBILD
CONNECTION DIAGRAM

LANGUAGE: DE EN

PROJECT: 5140630_01

SHEET 1
1 SH.

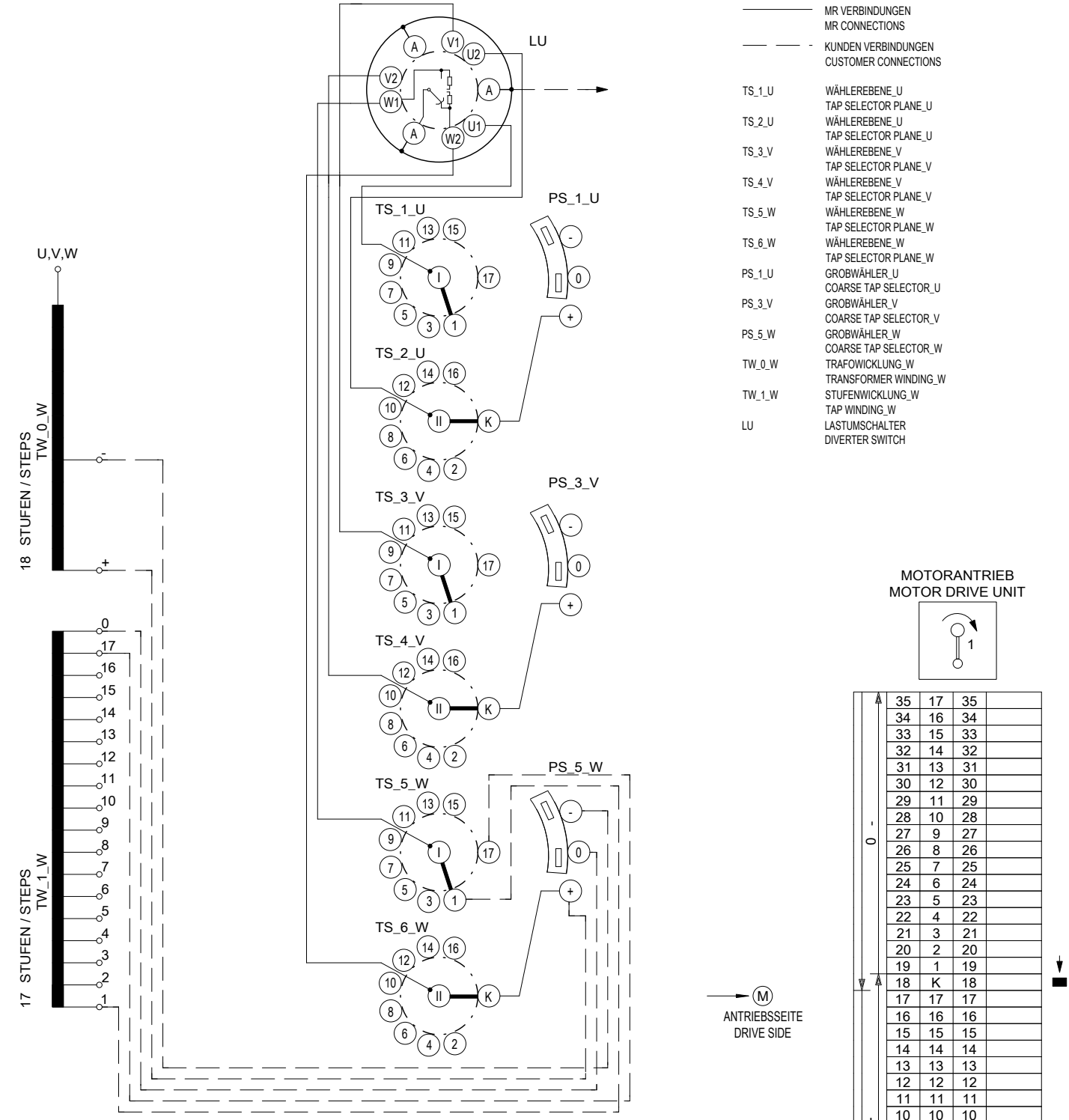

0 -	35	17	35
	34	16	34
	33	15	33
	32	14	32
	31	13	31
	30	12	30
	29	11	29
	28	10	28
	27	9	27
	26	8	26
	25	7	25
	24	6	24
	23	5	23
	22	4	22
	21	3	21
	20	2	20
	19	1	19
0 +	18	K	18
	17	17	17
	16	16	16
	15	15	15
	14	14	14
	13	13	13
	12	12	12
	11	11	11
	10	10	10
	9	9	9
	8	8	8
	7	7	7
	6	6	6
	5	5	5
	4	4	4
	3	3	3
	2	2	2
	1	1	1

BETRIEBSSTELLUNGEN SERVICE POSITIONS	35
VERSCHIEDENE SPANNUNGEN DIFFERENT VOLTAGES	35
JUSTIERSTELLUNG ■ ADJUSTMENT POSITION	18

STELLUNG DES GROBWÄHLERS POSITION OF COARSE TAP SELECTOR
BETRIEBSSTELLUNG SERVICE POSITION
BEZEICHNUNG DER WÄHLERKONTAKTE DESIGNATION OF TAP SELECTOR CONTACTS
BEZEICHNUNG DER STELLUNGEN DESIGNATION OF POSITIONS
REGELBEREICH (kV) REGULATION RANGE (kV)

Fuer diese technische Unterlage behalten wir uns gemaess DIN 34 Abschnitt 2.1 und 2.2 alle Rechte vor.
DRAWING BY CAD DO NOT MODIFY MANUALLY

NO. | MODIFICATION | DATE | NAME

LASTSTUFENSCHALTER
ON-LOAD TAP-CHANGER

VACUTAP® VRS III 700Y-123/C-18 35 1G

DATE	02.08.2017
EXEC.	KONFIG
VERIFIED	CSO
STANDARD	

ORIGIN. | REPL. | REPL.BY

SCHALTBILD
CONNECTION DIAGRAM

LANGUAGE: DE EN

PROJECT: 5140631_01

SHEET 1
1 SH.

———	MR VERBINDUNGEN MR CONNECTIONS
— — -	KUNDEN VERBINDUNGEN CUSTOMER CONNECTIONS
TS_1	WÄHLEREBENE TAP SELECTOR PLANE
TS_2	WÄHLEREBENE TAP SELECTOR PLANE
PS_1	WENDER REVERSING CHANGE-OVER SELECTOR
TW_0	TRAFOWICKLUNG TRANSFORMER WINDING
TW_1	STUFENWICKLUNG TAP WINDING
LU	LASTUMSCHALTER DIVERTER SWITCH

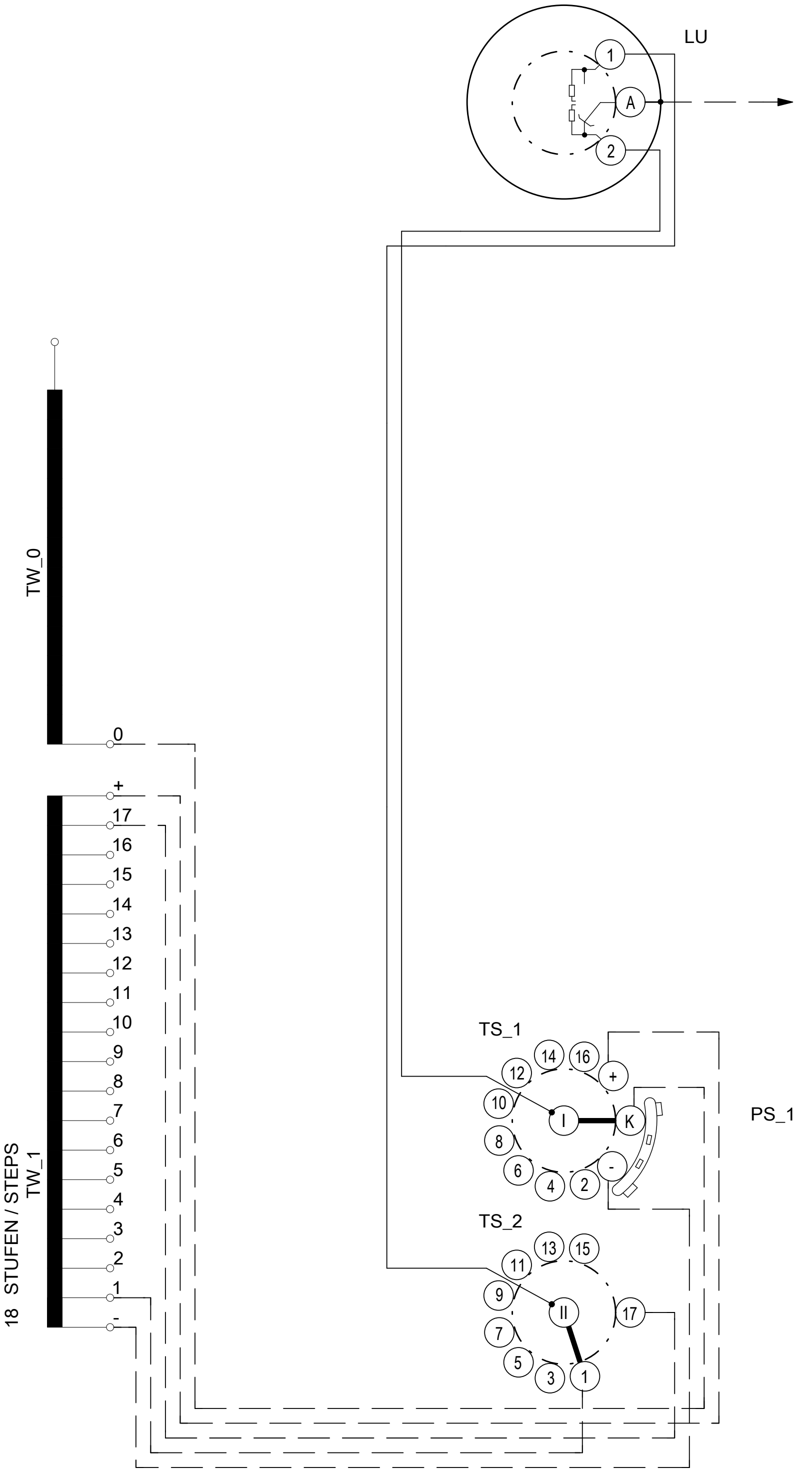

MOTORANTRIEB
MOTOR DRIVE UNIT

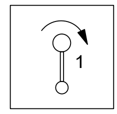

STELLUNG DES WENDERS / POSITION OF REVERSING CHANGE-OVER SELECTOR	BETRIEBSSTELLUNG / SERVICE POSITION	BEZEICHNUNG DER WÄHLERKONTAKTE / DESIGNATION OF TAP SELECTOR CONTACTS	BEZEICHNUNG DER STELLUNGEN / DESIGNATION OF POSITIONS	REGELBEREICH (kV) / REGULATION RANGE (kV)
	35	17	35	
	34	16	34	
	33	15	33	
	32	14	32	
	31	13	31	
	30	12	30	
	29	11	29	
	28	10	28	
K -	27	9	27	
	26	8	26	
	25	7	25	
	24	6	24	
	23	5	23	
	22	4	22	
	21	3	21	
	20	2	20	
	19	1	19	
	18	K	18	
	17	17	17	
	16	16	16	
	15	15	15	
	14	14	14	
	13	13	13	
	12	12	12	
	11	11	11	
	10	10	10	
K +	9	9	9	
	8	8	8	
	7	7	7	
	6	6	6	
	5	5	5	
	4	4	4	
	3	3	3	
	2	2	2	
	1	1	1	

BETRIEBSSTELLUNGEN SERVICE POSITIONS	35
VERSCHIEDENE SPANNUNGEN DIFFERENT VOLTAGES	35
JUSTIERSTELLUNG ADJUSTMENT POSITION ▬	18

Fuer diese technische Unterlage behalten wir uns gemaess DIN 34 Abschnitt 2.1 und 2.2 alle Rechte vor.
DRAWING BY CAD DO NOT MODIFY MANUALLY

LASTSTUFENSCHALTER
ON-LOAD TAP-CHANGER

VACUTAP® VRS I 701-123/C-18 35 1W

NO. | MODIFICATION | DATE | NAME

ORIGIN. | REPL. | REPL.BY

DATE 01.08.2017
EXEC. KONFIG
VERIFIED CSO
STANDARD

SCHALTBILD
CONNECTION DIAGRAM

LANGUAGE: DE EN

PROJECT: 5140632_01

=
+

SHEET 1
1 SH.

Maschinenfabrik Reinhausen GmbH
Falkensteinstrasse 8
93059 Regensburg
Germany
+49 941 4090-0
info@reinhausen.com
reinhausen.com

Please note:
The data in our publications may differ from the data of the devices delivered.
We reserve the right to make changes without notice.
5224510/09 JA - VACUTAP® VR® 技術データ -
F0392505 - 07/23
Maschinenfabrik Reinhausen GmbH 2023

THE POWER BEHIND POWER.